Town of Johnstown

TOWN COUNCIL REGULAR MEETING

450 S. Parish, Johnstown, CO
Monday, March 07, 2022 at 7:00 PM

MISSION STATEMENT: Enhancing the quality of life of our residents, businesses, and visitors through community focused leadership.

AGENDA

CALL TO ORDER

Pledge of Allegiance

ROLL CALL

AGENDA APPROVAL

SPECIAL PRESENTATIONS

1. Business of the Month - Presented by Sarah Crosthwaite Economic Development Manager

PUBLIC COMMENT

Members of the audience are invited to speak at the Council meeting. Public Comment is reserved for citizen comments on items not contained on the printed agenda. Citizen comments are limited to three (3) minutes per speaker. When several people wish to speak on the same position on a given item, they are requested to select a spokesperson to state that position.

CONSENT AGENDA

The Consent Agenda is a group of routine matters to be acted on with a single motion and vote. Council or staff may request an item be removed from the Consent Agenda and placed on the Regular Agenda for discussion.

2. Minutes - February 23, 2022
3. Second Reading Ordinance 2022-226 -An Ordinance Amending Chapter 6 of the Johnstown Municipal Code to Include Article XII, Special Event Permits
4. Subdivision Development and Improvement Agreement - Uncle Benny's Marketplace Resubdivision
5. Second Amendment to the Franchise Agreement Town of Johnstown, Colorado and TDS Broadband, LLC

TOWN MANAGER REPORT

6. Town Manager's Report

TOWN ATTORNEY REPORT

NEW BUSINESS

7. Charlotte Street Project for Discussion
8. Contract IGA Between Town of Johnstown and Colorado Department of Transportation for CP5 - Highway 60 and I-25 Aesthetic Improvements

PUBLIC HEARING

9. Ordinance 2022-227 Approving the Outline Development Plan for Thompson Ridge Estates P.U.D., consisting of approximately 20.01 acres

COUNCIL REPORTS AND COMMENTS

MAYOR'S COMMENTS

EXECUTIVE SESSION

INFORMATION ITEMS

10. Informational Items

ADJOURN

AMERICANS WITH DISABILITIES ACT NOTICE

In accordance with the Americans with Disabilities Act, persons who need accommodation in order to attend or participate in this meeting should contact Town Hall at (970) 587-4664 within 48 hours prior to the meeting in order to request such assistance.

Town of Johnstown

TOWN COUNCIL REGULAR MEETING
450 S. Parish, Johnstown, CO
Wednesday, February 23, 2022 at 7:00 PM

MINUTES

CALL TO ORDER

Mayor Lebsack called the meeting to order at 7:00 p.m. and led the Pledge of Allegiance.

ROLL CALL

PRESENT

Mayor Gary Lebsack
Councilmember Damien Berg
Councilmember Troy Mellon
Councilmember Jesse Molinar
Councilmember Amy Tallent
Councilmember Chad Young

ABSENT

Councilmember Stevens

Staff present: Matt LeCerf, Town Manager, Avi Rocklin, Town Attorney, Kim Meyer, Planning Director, Sarah Crosthwaite, Economic Development Manager, Troy White, Public Works Director, Mitzi McCoy, Finance Director, Ellen Hilbig, Utilities Director and Lieutenant Kyle Williams.

AGENDA APPROVAL

Motion made by Councilmember Tallent, seconded by Councilmember Mellon to approve the agenda. Motion carried with a unanimous vote.

CONSENT AGENDA

Motion made by Councilmember Berg, seconded by Councilmember Mellon to approve the Consent Agenda. Motion carried with a unanimous vote.

- Minutes - February 7, 2022
- January 2022 Financial Statements
- List of Bills - February 2022
- Second Reading Ordinance 2022-223 - Approving the Rezoning of the East Ledge Rock Center to Planned Unit Development - Mixed Use (PUD-MU)
- Second Reading Ordinance 2022-224, Approving the Outline Development Plan (ODP) for Ledge Rock Center P.U.D.
- Second Reading Ordinance 2022-225 - An Ordinance Authorizing the Conveyance of Real Property located at Lot 2, Oxy Land Subdivision, in the Northwest 1/4, Section 11, Township 4 North, Range 68 West of the 6th P.M., Town of Johnstown, County of Weld, State of Colorado, Consisting of Approximately 33.22 Acres, to Ledge Rock Center, LLC

- Façade Grant Program Updates
- Resolution 2022-06 - A Resolution of the Town of Johnstown, Colorado, supporting the application for an Energy Impact Grant from the State of Colorado Department of Local Affairs, for the Charlotte Street Capital Project.

PUBLIC HEARING

1. First Reading Ordinance No. 2022-226: An Ordinance Amending Chapter 6 of the Johnstown Municipal Code to Include Article XII, Special Event Permits - Mayor Lebsack opened the public hearing at 7:07 and heard from staff. This ordinance amends Chapter 6 of the Johnstown Municipal Code to adopt policies and procedures regulating special events. Having no public comment, the public hearing closed at 7:12. Motion made by Councilmember Berg, seconded by Councilmember Molinar Jr. to approve Ordinance No. 2022-226, an Ordinance Amending Chapter 6 of the Johnstown Municipal Code to include Article Article XII, Special Event Permits upon first reading. Motion carried with a unanimous vote.

NEW BUSINESS

1. Resolution 2022-05 Finding Substantial Compliance for Initiating Annexation Proceedings and Setting a Pubic Hearing Date for the South Ridge Annexation -This resolution sets a public hearing date for the annexation request for Monday, April 4, 2022. Motion made by Councilmember Mellon, seconded by Councilmember Molinar to approve Resolution 2022-05 regarding Finding Substantial Compliance for Initiating Annexation Proceedings and setting a public hearing date for the South Ridge Annexation. Motion carried with a unanimous vote.

2. Downtown Parklet Program -Staff was awarded grant funds from CDOT's Revitalize Main Street Program for a Parklet program. Two options were provided to Council; 1. Parklet Event Program Concept, any and all public events held in the downtown corridor would have access to request parklets to use during the event with Town Staff doing the installing and removal of the parklets. The use of these parklets would be free by the request of the event applicant prior to the event. 2. Termination of the proposed Parklet Program and forfeit the grant funds. Motion made by Councilmember Mellon, seconded by Councilmember Berg to approve the Parklet Event program concept and utilize the awarded CDOT grant funds from the Revitalize Main Street program. Motion carried with a unanimous vote.

3. Highway 60 & I-25 Bridge Aesthetic Improvements – The Town has been working with BHA Design and Colorado Department of Transportation on the bridge aesthetic improvements for the last several years. Various options for the landscaping and how to finish the faces of the columns with brick veneer are being considered. It is the opinion of staff and BHA Design staff that using the brick veneer and complete the landscaping in its entirety now is the best alternative. Motion made by Councilmember Mellon, seconded by Councilmember Young to approve Option C, completed with brick veneer and the full landscaping improvements, at a dollar amount of $7,628,944. Motion carried with a unanimous vote.

ADJOURN

The meeting adjourned at 7:44 p.m.

Town of Johnstown

TOWN COUNCIL CONSENT AGENDA COMMUNICATIONS

AGENDA DATE: March 7, 2022

SUBJECT: Ordinance No. 2022-226: An Ordinance Amending Chapter 6 of the Johnstown Municipal Code to Include Article XII, Special Event Permits

ACTION PROPOSED: Consider Second Reading of Ordinance No. 2022-226

ATTACHMENTS: Ordinance 2022-226

PRESENTED BY: Diana Seele, Town Clerk

Council held a public hearing on February 23, 2022 and approved Ordinance No. 2022-226 on first reading.

LEGAL ADVICE:
The ordinance presented was drafted by the Town Attorney.

FINANCIAL ADVICE:
N/A

RECCOMMENDED ACTION:
Approve Ordinance 2022-226 An Ordinance Amending Chapter 6 of the Johnstown Municipal Code to Include Article XII, Special Event Permits on second reading.

Reviewed and Approved for Presentation,

Town Manager

TOWN OF JOHNSTOWN, COLORADO

ORDINANCE NO. 2022 -226

AN ORDINANCE AMENDING CHAPTER 6 OF THE JOHNSTOWN MUNICIPAL CODE TO INCLUDE ARTICLE XII, SPECIAL EVENT PERMITS

WHEREAS, the Town of Johnstown, Colorado is a municipal corporation duly organized and existing under its Home Rule Charter adopted pursuant to Article XX of the Constitution of the State of Colorado; and

WHEREAS, the Town Council is vested with authority to administer the affairs of the Town; and

WHEREAS, Chapter 6 of the Johnstown Municipal Code regulates licensing and permitting in the Town; and

WHEREAS, Town staff recommends that the Town Council amend Chapter 6 to adopt policies and procedures regulating special events, including parades, athletic contests and other outdoor events, because such events require the temporary closure of streets, roads, highways, sidewalks or bike and pedestrian lanes or paths that are normally open to the public or require the modification of normal traffic uses of any street, road or highway in the Town; and

WHEREAS, based on Town staff's recommendation, the Town Council desires to adopt policies and procedures regulating special events; and

WHEREAS, the Town Council finds that it is in the best interest of the Town of Johnstown to amend Chapter 6 of the Johnstown Municipal Code to include Article XII, Special Event Permits.

NOW, THEREFORE, BE IT ORDAINED BY THE TOWN COUNCIL OF THE TOWN OF JOHNSTOWN, COLORADO, AS FOLLOWS:

Section 1. Chapter 6 of the Johnstown Municipal Code shall be amended to include Article XII, Special Event Permits, and shall read as follows:

ARTICLE XII SPECIAL EVENT PERMITS

Sec. 6-220. Purpose.

This Article establishes standards for the issuance of permits for special events in the Town.

Sec. 6-221. Definitions.

As used in this Article, the following terms shall have the meanings indicated:

Applicant means any person or organization who applies for a special event permit.

Permit or *special event permit* means a permit issued for a special event.

Permittee means any person or organization issued a special event permit by the Town Clerk.

Special event means a parade, athletic contest or other outdoor event requiring temporary closure of streets, roads, highways, sidewalks or bike and pedestrian lanes or paths that are normally open to the public, or the changing, restricting or adapting of the normal traffic uses of any street, road or highway in the Town.

Street or *highway* has the same meaning as defined in the Model Traffic Code and other ordinances appearing in this Code and includes bike and pedestrian lanes or paths.

Sec. 6-222. Permit required.

Any person or organization desiring to conduct a special event shall first obtain a permit from the Town Clerk. A permit shall not be required for a special event that does not involve the closure of any streets, roads, highways, sidewalks or bike and pedestrian lanes or paths that are normally open to the public. Funeral processions shall not be considered special events.

Sec. 6-223. Application procedure and fee.

(a) Any person or organization desiring to conduct a special event shall apply for a special event permit by submitting an application to the Town Clerk, on a form supplied by the Town Clerk. Applications must be submitted not less than forty-five (45) business days nor more than six (6) months before the special event date.

(b) If the applicant is not an organization qualified for exemption from the payment of Town sales and use taxes, the application for a special event permit shall be accompanied by a nonrefundable application fee in an amount set forth in the Town Fee Schedule.

(c) Upon receipt of a complete application and fee, if applicable, the Town Clerk shall approve, conditionally approve or deny an application for the reasons specified in this Article.

Sec. 6-224. Grounds for denial of application.

The Town Clerk shall approve an application for a special event permit unless the Town Clerk determines that:

(1) Information contained in the application, or supplemental information requested from the applicant, is found to be false in any material detail,

(2) The applicant fails to complete the application form after having been notified of the additional information or documents required;

(3) Another special event permit or application has been received prior in time, or has already been approved, to hold another special event at the same time and place requested by the applicant, or so close in time and place as to cause undue traffic congestion;

(4) The time, route or size of the special event will substantially interrupt the safe and orderly movement of traffic on or contiguous to the event site or route or will disrupt the use of a street or highway at a time when it is usually subject to traffic congestion;

(5) The size, nature or location of the special event will present a substantial risk to the public health, safety or welfare, participants in the event or other persons;

(6) The location of the special event will substantially interfere with any construction or maintenance work scheduled to take place upon or along the Town streets or a previously granted encroachment permit;

(7) The special event will occur at a time when a school is in session on a route or at a location adjacent to the school or class thereof, and the noise created by the activities of the event would substantially disrupt the educational activities of the school or class;

(8) The special event involves the use of hazardous, combustible or flammable materials which could create a fire hazard;

(9) The special event will violate an ordinance or statute; or

(10) The issuance of the special event permit is not in the best interest of the public health, safety or welfare.

Sec. 6-225. Permit conditions and requirements.

The Town Clerk may condition the issuance of a special event permit by imposing conditions and requirements, including but not limited to the following:

(1) Approval of any other jurisdiction in addition to the Town that may be part of the proposed special event;

(2) Submission of a traffic control plan to be approved by the Town Clerk and the Johnstown Police Department;

(3) All required traffic control shall be done at the permittee's expense;

(4) A written operational plan regarding the management of the special event;

(5) Conditions concerning accommodation of pedestrian or vehicular traffic, including restricting the special event to only a portion of a street or highway;

(6) Requirements for the use of traffic cones, barricades or other traffic-control devices to be provided, placed and removed by the permittee at its expense;

(7) Requirements for provision of first aid or sanitary facilities, including portable toilets;

(8) Requirements for arrangement of supplemental fire protection and emergency medical services personnel to be present at the special event at the permittee's expense;

(9) Requirements for use of special event monitors and providing notice of permit conditions to event participants and affected property owners;

(10) Restrictions on the number and type of vehicles as may be required for fire safety by the Front Range Fire Rescue Fire Protection District and/or the Loveland Fire Rescue Authority;

(11) Requirements for use of garbage containers, cleanup and restoration of Town property;

(12) Restrictions on the use of amplified sound; and/or

(13) Requirements for public liability insurance to protect against loss from liability imposed by law for damages on account of bodily injury and/or property damage arising from the special event. The Town Clerk shall determine whether to require such insurance and the amount of any required insurance.

Sec. 6-226. Appeal procedure.

The applicant shall have the right to appeal the denial of the issuance of a permit or a permit condition. A notice of appeal shall be filed with the Town Manager's office, setting forth the grounds for the appeal, within five (5) business days after the Town Clerk provides written notice of denial of the issuance of the permit or the permit condition. The Town Manager shall thereafter determine whether to

sustain, reverse or modify the Town Clerk's decision. In so doing, the Town Manager may conduct a hearing. The Town Manager shall endeavor to render a decision in a timely manner that provides the applicant at least three (3) days' notice prior to the date and time of the proposed special event. If the Town Manager determines that circumstances do not permit the rendering of a decision in such time period, the Town Manager shall notify the applicant in writing and the applicant may thereafter seek judicial review of the permit denial or condition with no further administrative review. The Town Manager's decision shall be final, subject only to such judicial review as permitted by law.

Sec. 6-227. Permit issuance.

If the Town Clerk determines that a permit should be granted, the Town Clerk shall issue the special event permit once the permittee has agreed in writing to comply with all terms and conditions of this Article.

Sec. 6-228. Rules and regulations.

The Town Clerk may, with approval of the Town Manager, adopt rules and regulations not inconsistent with the provisions of this Article governing special events. Such rules and regulations shall be on file and available for public examination in the office of the Town Clerk. The failure to comply with any rule or regulation promulgated under this Article, as such rules and regulations may be amended from time to time, shall be deemed a violation of this Article.

Sec. 6-229. Indemnification.

Prior to the issuance of a special event permit, the Town Clerk shall require the permittee and authorized officer of the sponsoring organization, if any, to sign an agreement providing that, unless subsequently waived by the Town in writing, the permittee shall reimburse the Town for any cost incurred by the Town in repairing damage to Town property resulting from the permitted special event. The agreement shall also provide that the permittee shall, unless subsequently waived by the Town in writing, defend the Town against, and indemnify and hold the Town harmless from, any liability to any persons resulting from any damage or injury occurring in connection with the permitted special event.

Sec. 6-230. Duties of permittee.

(a) The permittee shall comply with all terms and conditions of the special event permit.

(b) The permittee shall ensure that the person leading a parade or other special event along a route, or the person in charge of any other special event, is familiar with all the provisions of the permit and carries the special event permit on his or her person for the duration of the event.

(c) Immediately following the completion of the special event, the permittee shall ensure that the area used for the event is cleaned and restored to the same condition as existed prior to the event.

Sec. 6-231. Revocation of permit.

(a) The Town Clerk may, at any time prior to the special event, revoke or terminate a special event permit to protect the public health, safety or welfare or if conditions have changed since issuance of the permit in a manner that would have required denial of the issuance of the permit in the first instance.

(b) The Town Manager or the Town Clerk may revoke or terminate the special event permit during the course of the special event if continuation of the event presents a clear and present danger to the participants or the public.

Sec. 6-232. Violations.

(a) It is unlawful for any person to sponsor or conduct a special event unless a permit has been issued for the event. It is unlawful for any person to participate in a special event with the knowledge that the sponsor of the event has not been issued a permit.

(b) It is unlawful for any person to interfere with or disrupt a special event.

(c) The special event permit authorizes the permittee to conduct only the special event described in the permit in accordance with the terms and conditions of the permit. It is unlawful for the permittee to knowingly violate the terms and conditions of the permit, or for any special event participant with knowledge of the permit to knowingly violate the terms and conditions of the permit.

(d) Any person who violates any provision of this Article may be punished in accordance with the provisions of Article IV of Chapter 1 of the Code.

(e) No remedy provided herein shall be exclusive, but the same shall be cumulative. The taking of any action permitted by this Article shall not preclude or prevent the taking of other action, including the filing a charge or conviction of a violation of this Article in the Municipal Court.

Section 2. Severability. If any part or provision of this Ordinance, or its application to any person or circumstance, is adjudged to be invalid or unenforceable, the invalidity or unenforceability of such part, provision, or application shall not affect any of the remaining parts, provisions or applications of this Ordinance that can be given effect without the invalid provision, part or application, and to this end the provisions and parts of this Ordinance are declared to be severable.

Section 3. Code revisions. Minor changes such as the format and other changes to unify the revised Code may be necessary. The Town Clerk is hereby authorized to make such changes, provided that neither the intent nor substantive content will be altered by such changes.

Section 4. Publication; Effective Date. This Ordinance, after its passage on final reading, shall be numbered, recorded, published and posted as required by the Home Rule Charter of the Town of Johnstown, Colorado ("Charter") and the adoption, posting and publication shall be authenticated by the signature of the Mayor and the Town Clerk and by the Certificate of Publication. This Ordinance shall become effective upon final passage as provided by the Charter. Copies of the entire Ordinance are available at the office of the Town Clerk.

INTRODUCED AND APPROVED on first reading by the Town Council of the Town of Johnstown, Colorado, this 23rd day of February, 2022.

TOWN OF JOHNSTOWN, COLORADO

ATTEST:

By: _____
Diana Seele, Town Clerk

By: _____
Gary Lebsack, Mayor

Town of Johnstown

TOWN COUNCIL CONSENT AGENDA COMMUNICATIONS

AGENDA DATE: March 7, 2022

SUBJECT: Subdivision Development and Improvement Agreement – Uncle Benny's Marketplace Resubdivision

ATTACHMENTS: 1. Agreement with Exhibits

PRESENTED BY: Kim Meyer, Planning & Development Director

ITEM DESCRIPTION:

The Owner, Johnstown-Taylor Family Properties, and Developers, Yopp, Ltd., and the Sandra L.S. Aste Revocable Trust, received approval of a subdivision replat for several commercial lots and associated right of way, along Marketplace Drive, in October of 2021.

The proposed agreement is based upon the Town's standard agreement and requires payment of required fees and taxes, and construction of all improvements in accordance with approved development plans and construction plans. No detailed construction or engineering documents or development plans have yet been submitted to the Town.

LEGAL ADVICE:

The agreement was prepared by the Town Attorney.

FINANCIAL ADVICE :

N/A

RECOMMENDED ACTION:

Approve the Subdivision Development and Improvement Agreement – Uncle Benny's Marketplace Resubdivision.

SUGGESTED MOTIONS:

For Approval

I move to approve the Subdivision Development and Improvement Agreement for Uncle Benny's Marketplace Resubdivision.

For Denial

I move to deny the Subdivision Development and Improvement Agreement for Uncle Benny's Marketplace Resubdivision, with the following findings...

Reviewed and Approved for Presentation,

Town Manager

SUBDIVISION DEVELOPMENT AND IMPROVEMENT AGREEMENT
FOR
TOWN OF JOHNSTOWN
(Uncle Benny's Marketplace Re-subdivision)

This Subdivision Development and Improvement Agreement ("Agreement") is made and entered into by and among the **Town of Johnstown, Colorado**, a municipal corporation (the "Town"), **Yopp Ltd.**, a Colorado limited liability company ("Yopp"), the **Sandra L. S. Aste Revocable Trust** ("Trust"), and **Johnson-Taylor Family Properties LLLP**, a Colorado limited liability limited partnership ("Johnson-Taylor").

WITNESSETH:

WHEREAS, Johnson-Taylor is the present owner of a parcel of land situated in the Town of Johnstown, County of Larimer, State of Colorado, the description of which is set forth on **Exhibit A** attached hereto and incorporated herein by this reference (the "Property"); and

WHEREAS, Johnson-Taylor has submitted a final plat for the Property, which final plat is attached hereto as **Exhibit B-1** and incorporated herein by this reference ("Final Plat"); and

WHEREAS, the Final Plat divides the Property into Lots 1 through 4 and references herein to particular lot numbers shall be to the corresponding lot or lots as identified in the Final Plat; and

WHEREAS, Yopp and the Trust (collectively "Developer") entered into a "Contract to Buy and Sell Real Estate" dated April 3, 2021, with Johnson-Taylor ("Purchase Contract"); and

WHEREAS, under the Purchase Contract, Developer expects to purchase Lots 1 through 3 from Johnson-Taylor with closing on the transaction ("Closing") to be completed in conjunction with the recording of the Final Plat; and

WHEREAS, Developer seeks to develop Lots 1 through 3 and to designate such development as **Uncle Benny's Marketplace Re-subdivision**; and

WHEREAS, the Town Council approved the Final Plat by passage of Resolution 2022-38, containing terms and conditions of approval of the Final Plat, which Resolution is attached hereto as **Exhibit B-2** and incorporated herein by this reference ("Resolution"); and

WHEREAS, Developer understands and agrees that, as a further condition of approval of the Final Plat, Developer is required to construct certain subdivision improvements to the Development, that Developer is responsible for the costs and expenses of those subdivision

improvements unless otherwise provided herein, and that the subdivision improvements contemplated herein are reasonable, necessary, appropriate, and directly benefit the Development; and

WHEREAS, Developer agrees to undertake and complete the Development in accordance with this Agreement, the Final Plat, the Resolution, the Town's ordinances, resolutions and regulations and all other applicable laws and regulations;

NOW, THEREFORE, in consideration of the premises cited above and the mutual covenants and promises contained herein, the sufficiency of which is acknowledged, the Town, Johnson-Taylor, and Developer agree as follows:

RECITALS

The Recitals are incorporated as if fully set forth herein.

DEFINITIONS

For the purposes of this Agreement, the following words and terms shall be defined as follows:

1.1 **"Approved Plans"** shall mean: (1) with respect to the Public Improvements, the approved "Civil Engineering Construction Plans" related to the Development and on file with Town; and (2) with respect to the Private Improvements, the approved "Site Development Plan" related to the Development and on file with Town.

1.2 **[Deleted. Not applicable.]**

1.3 **"Civil Engineering Construction Plans"** shall mean the approved engineering plans for construction, installation and improvement of the Public Improvements.

1.4 **"Development"** shall mean all the property, property rights and Subdivision Improvements within the legal description of Lots 1 through 3 in **Exhibit A**.

1.5 **"Dry Utilities"** shall mean electricity, natural gas, cable and telephone in the Development.

1.6 **"Maintenance Guarantee"** shall mean a guarantee that the Public Improvements constructed shall be free from defects and failures as more fully described in Paragraphs 5.2 and 5.4 below.

1.7 "**Notice of Construction Acceptance**" shall mean the written certification that the Public Improvements are complete which starts the warranty period.

1.8 "**Notice of Final Acceptance**" or "**Final Acceptance**" shall mean the written certification of final acceptance of the Public Improvements issued subsequent to the warranty period.

1.9 **"Private Improvements"** shall mean, without limitation, the construction, installation and improvement of privately owned and maintained common improvements in the Development including, but not limited to, stormwater improvements, landscaping, irrigation, fencing, entry signs, street signs and posts, street lighting, parks and open space, trails, postal service boxes and school bus stop shelters.

1.10 **"Public Improvements"** shall mean, without limitation, the construction, installation, improvement and dedication of public improvements in the Development, including, but not limited to public thoroughfares and streets, sanitary sewer facilities, water line facilities, drainage facilities in the public right of way, irrigation structures, if any, that are not exclusively for the benefit of the Development, right-of-way landscaping and irrigation structures, street lighting or signage, and other public facilities and improvements to serve the Development. The Public Improvements include, but are not limited to, the improvements in the Development listed on **Exhibit B-3**, in whatever form they are referenced, that will be dedicated to the Town.

1.11 **"Performance Guarantee"** shall mean a guarantee that the Public Improvements and Private Improvements shall be constructed in conformance with the Approved Plans.

1.12 **"Site Development Plan"** shall mean the approved plans for the construction, installation and improvement of the Private Improvements.

1.13 **"Subdivision Improvements"** shall mean the Public Improvements, Private Improvements and Dry-Utilities.

1.14 **"Town"** shall mean the Town of Johnstown, Colorado.

1.15 **"Town Engineer"** shall mean the professional engineer designated by the Town Manager.

1.16 **"Town Manager"** shall include the Town Manager and his authorized designees.

1.17 **"Town Official"** shall include the Town Manager, Town Attorney, Town Treasurer, Town Engineer, Public Works Director, Planning and Development Director, Utilities Director, and their authorized designees.

SUBDIVISION IMPROVEMENTS

2. Public Improvements

2.1 ***Pre-Construction***

a. **Engineering Services:** Developer shall furnish, at its own expense, all engineering services in connection with construction, installation and improvement of the Public Improvements. Engineering services shall be performed by a professional engineer registered in the State of Colorado. Engineering services shall consist of, but not be limited to, survey, designs, plans and profiles, specifications, drawings, estimates, construction administration, and the furnishing of necessary documents in connection therewith, including but not limited to final engineering drawings, final sewer and water design plans and final drainage plans (the "Civil Engineering Construction Plans").

b. **Civil Engineering Construction Plans:** Prior to commencing construction of the Public Improvements, Developer shall submit the Civil Engineering Construction Plans to the Town for review and shall participate in a pre-construction meeting with the Town Public Works Department. Construction of the Public Improvements shall not commence until the Town provides written notice of approval of the Civil Engineering Construction Plans. Developer shall not thereafter modify the approved Civil Engineering Construction Plans without the written approval of the Town. If phasing is indicated on the approved Civil Engineering Construction Plans, such phasing may be modified only with approvals of the Town. The Town's review and approval of the Civil Engineering Construction Plans shall not limit or affect Developer's responsibility or liability for design, construction and installation of the Public Improvements, and Developer agrees to save and hold the Town harmless from any claims, fault or negligence attributable to such design, construction and installation, other than negligent designs which are required by the Town over Developer's written objection.

Phasing of Public Improvements and Private Improvements is indicated on the approved development plans and construction drawings; such phasing may be modified only with the approvals of the Public Works Director and the Planning & Development Director.

c. **Rights-of-Way, Easements, Permits and Use Tax**: Prior to commencing construction of the Public Improvements, Developer shall acquire, at its own expense, good and sufficient rights-of-way or easements, clear of any encumbrances, on all lands and facilities, if any, traversed by the proposed Public Improvements. All such rights-of-way and easements shall be conveyed to the Town and the documents of conveyance shall be furnished to the Town Manager

for recording. At the Town's request, Developer shall provide at its sole expense a policy of title insurance insuring title in the Town, free and clear of all liens and encumbrances, for all land, property and easements dedicated or conveyed to the Town or for public use. Any agreements or easements to which the Town may effectively become a party upon land dedication or acceptance of improvements shall be provided to the Town for review prior to execution of such agreement or easement and prior to issuance of building permits. In addition, Developer shall obtain all the requisite permits and licenses necessary for construction of the Public Improvements. Developer shall also pay all applicable use tax due and owing to the Town.

2.2 ***Construction of Public Improvements:***

2.2.1 Upon satisfaction of the conditions set forth in Paragraph 2.1 and the notice requirement set forth below, Developer shall construct the Public Improvements at its own expense in accordance with this Agreement, the Final Plat, the Resolution, the Civil Engineering Construction Plans, the Town's ordinances, resolutions and regulations and all other applicable laws and regulations. All Public Improvements shall be installed and constructed within the rights-of-way or easements dedicated to the Town. Unless otherwise approved by the Town in writing, all materials used for constructing the Public Improvements shall be new and both workmanship and materials shall be of good quality.

2.2.2 At least seven (7) days prior to the commencement of construction, Developer shall provide written notice to all property owners within a 600-foot radius of the construction and to any other property owners who are reasonably likely to be impacted by the construction of the fact of the construction along with contact information for the Developer. Such contact list shall be provided to the Town with a copy of the notification prior to the commencement of the construction. Notification may by U.S. mail or by delivering a printed flyer left at each affected home or business location.

2.3 ***Construction Schedule:*** Developer shall construct the Public Improvements in accordance with a subsequently agreed-upon schedule. Once construction begins, Developer shall keep the Town Manager informed by weekly status reports of the progress of the work and a projection of when the Public Improvements will be completed as well as the cost of such Public Improvements.

2.4 ***Testing and Inspection***: Developer shall employ, at its own expense, a qualified independent testing company, approved by the Town Engineer, to perform all testing of materials or construction that may be reasonably required by the Town. Developer shall furnish certified copies of test results to the Town Engineer. At all times during construction of the Public Improvements, the Town shall have the right, but not the duty, to inspect materials and workmanship, at Developer's cost. All materials and work must conform to the Civil Engineering Construction Plans. Any material or work not conforming to the Civil Engineering Construction

Plans shall be promptly removed, repaired or replaced, at Developer's expense and to the satisfaction of the Town Engineer.

2.5 ***Completion of Construction:*** Developer shall complete construction of the Public Improvements no later than eighteen (18) months from the commencement of the construction, unless such completion date is extended for reasons beyond the reasonable control of Developer and Developer has obtained the Town Manager's written consent to the extension.

2.6 ***Performance Guarantee***: To secure the construction, installation, improvement and completion of the Public Improvements and Private Improvements, Developer shall furnish to the Town a cash escrow deposited with the Town or an irrevocable letter of credit in the form attached hereto as **Exhibit D** in which the Town is designated as the beneficiary ("Performance Guarantee") in an amount equal to 110% of the cost of such improvement, which cost shall be certified by Developer's professional engineer, licensed in the State of Colorado and approved by the Town Engineer. The Performance Guarantee shall be released after the Notice of Construction Acceptance has been provided for such improvement.

3. **Private Improvements**

3.1 ***Pre-Construction:*** Prior to commencing construction of the Private Improvements, Developer shall submit a Site Development Plan to the Town. The Site Development Plan shall contain the proposed Private Improvements for the Development, including a plan for stormwater improvements, an irrigation system, landscaping and soil amendments, fencing, entry-way signage, street signs and posts, street lighting, parks and open space, trails and postal service boxes. Landscaping and fencing shall be designed in accordance with the Town's landscape guidelines. Construction of the Private Improvements shall not commence until the Town provides written notice of approval of the Site Development Plan. Developer shall not thereafter modify the approved Site Development Plan without the written approval of the Town. The Town's review and approval of the Site Development Plan shall not limit or affect Developer's responsibility or liability for design, construction and installation of the Private Improvements, and Developer agrees to save and hold the Town harmless from any claims, fault or negligence attributable to such design, construction and installation, other than negligent designs which are required by the Town over Developer's written objection. In addition, Developer shall obtain all the requisite permits and licenses necessary for construction of the Private Improvements. Developer shall also pay all applicable use tax due and owing to the Town and the county.

3.2 ***Construction of Private Improvements:*** Upon satisfaction of the conditions set forth in Paragraph 3.1, Developer shall construct the Private Improvements at its own expense in accordance with the terms of this Agreement, the Final Plat, the Resolution, the Site Development Plan, the Town's ordinances, resolutions and regulations and all other applicable laws and regulations. All landscaping services shall be performed by a professional landscape contractor

certification of required soil amendment shall be signed by Developer and provided to the Town. Unless otherwise approved by the Town in writing, all materials used for constructing the Private Improvements shall be new and both workmanship and materials shall be of good quality.

3.3 ***Inspection***: At all times during construction and installation of the Private Improvements, the Town shall have the right, but not the duty, to inspect materials and workmanship, at Developer's cost. All materials and work must conform to the Site Development Plan. Any material or work not conforming to the Site Development Plan shall be promptly removed, repaired or replaced, at Developer's expense and to the satisfaction of the Town.

3.4 ***Completion of Private Improvements:*** Unless otherwise agreed in writing by the Town Manager, the Private Improvements shall be completed no later than the date that the Public Improvements are completed, unless such completion date is extended for reasons beyond the reasonable control of Developer and Developer has obtained the Town Manager's written consent to the extension. The Town may, in its discretion, allow Developer to defer completion of the landscaping services between December 1 and March 1 of any given year provided that sufficient surety in the form of a cash escrow deposited with the Town or an irrevocable letter of credit in the form attached hereto as **Exhibit D** in which the Town is designated as the beneficiary is provided to the Town. For clarity, the Private Improvements referenced herein do not apply to backyard improvements, which are anticipated to be installed by homeowners.

3.5 ***Replacement of Private Improvements:*** As replacement of the Private Improvements is necessary and warranted over time, including but not limited to decorative light fixtures, decorative street signs and all other decorative amenities in the Development, the Private Improvements shall be replaced by, as appropriate, the Developer, the owners' association, or a metropolitan or special district. The Town shall not be responsible for replacement of the Private Improvements.

4. **Dry-Utilities**

4.1 ***Utilities:*** Developer shall obtain all proper conveyances and arrangements for the installation and provision of the Dry Utilities to serve the Development. Developer shall provide proof of such conveyances and arrangements to the Town, which proof may be in the form of contracts for such services, no later than the date that the Public Improvements are completed.

4.2 ***Easements:*** All easements approved by the utility companies shall be submitted to the Town.

ACCEPTANCE OF SUBDIVISION IMPROVEMENTS

5.1 ***Notice of Construction Acceptance***: Developer shall make written application to the Town Manager for acceptance of the Public Improvements and for final review of the Private Improvements, within thirty (30) days of the completion date of the Subdivision Improvements, with the exception of the improvements for which the Town has authorized an extension of time to complete. With respect to the Public Improvements, the written application shall include one set of reproducible "as built" drawings and an affidavit executed by Developer affirming that the Public Improvements have been paid in full, certifying the final construction costs and including documentary evidence of the construction costs. If the Town Manager requests, Developer shall provide lien waivers, or other acceptable assurance, from all subcontractors, suppliers and materialmen who have furnished labor, material or services for the design, construction or installation of the Subdivision Improvements. The affidavit and lien waivers may be reviewed by the Town, but the Town assumes no responsibility or liability to or for anyone regarding the veracity of the information so provided.

After the receipt of the written application, the Town shall use reasonable efforts to promptly inspect the Subdivision Improvements. If the Subdivision Improvements are satisfactory, Developer shall be entitled to a Notice of Construction Acceptance of the Public Improvements upon receipt of the Maintenance Guarantee and written approval of the Private Improvements. If the Subdivision Improvements are not satisfactory, the Town shall prepare a detailed written description of all Subdivision Improvements which are not in compliance with the Approved Plans, subject to any changes that have been approved by the Town and any changes that have been required by the Town as a result of any unforeseen engineering design issues. Such report shall be delivered to Developer. After curing the defects, Developer shall make a renewed written application to the Town for re-inspection of the Subdivision Improvements, which written application shall contain the items set forth above. The Town shall thereafter use reasonable efforts to promptly re-inspect the Subdivision Improvements. If the Subdivision Improvements are satisfactory, Developer shall be entitled to the issuance of a Notice of Construction Acceptance for the Public Improvements upon receipt of the Maintenance Guarantee and written approval of the Private Improvements.

5.2 ***Maintenance Guarantee.*** Prior to the issuance of the Notice of Construction Acceptance of the Public Improvements, Developer shall provide the Town with a maintenance guarantee in the form of a cash escrow deposited with the Town or an irrevocable letter of credit in the form attached hereto as **Exhibit D** in which the Town is designated as the beneficiary ("Maintenance Guarantee"). The Maintenance Guarantee shall equal fifteen percent (15%) of the total cost of the Public Improvements. The Maintenance Guarantee shall warrant and guarantee all expenses and costs for maintenance, repairs and replacements of the Public Improvements until Final Acceptance. The Maintenance Guarantee shall be released after Final Acceptance of all of the Public Improvements. The Maintenance Guarantee may also be used to ensure that the

installed landscaping, a Private Improvement, is satisfactorily established during the period between the issuance of the Notice of Construction Acceptance and Final Acceptance of the Public Improvements.

5.3 ***Delivery of Notice of Construction Acceptance.*** Upon satisfaction of the conditions set forth above in Paragraphs 5.1 and 5.2, the Town shall provide written Notice of Construction Acceptance of the Public Improvements and written approval of the Private Improvements to Developer. The Town may issue a written Notice of Construction Acceptance of the Public Improvements and written approval of the Private Improvements prior to completion of certain of the less critical improvements, as determined and agreed-upon by the Town in its sole discretion. In which case, the Developer may be entitled to obtain building permits prior to completion of all the Subdivision Improvements, assuming satisfaction of the remaining terms of this Agreement and based on conditions otherwise set forth herein.

5.4 ***Maintenance, Repair and Replacement***: Until Final Acceptance of the Public Improvements, Developer shall promptly perform all maintenance and make all repairs and replacements of all defects or failures of the Public Improvements at Developer's expense and shall ensure that the installed landscaping is established. If, within ten (10) days after Developer's receipt of written notice from the Town requesting such maintenance, repairs or replacements, Developer shall not have undertaken with due diligence to make the same, the Town may make such maintenance, repairs or replacements at Developer's expense and shall be entitled to draw upon the Maintenance Guarantee, either before undertaking to make such repairs or at any time thereafter or the Town may charge Developer for the costs thereof. In case of emergency, as determined by the Town, such written notice shall be deemed waived and the Town may proceed as it deems necessary at the expense of Developer or the issuers of the Maintenance Guarantee. Notwithstanding the foregoing, upon the issuance of the Notice of Construction Acceptance, the Town shall be responsible for routine maintenance of the Public Improvements (street sweeping, snow removal, etc.) and the Developer shall be responsible for all maintenance, repairs and replacement of the Private Improvements.

5.5 ***Final Acceptance***: Two (2) years after the Town's issuance of the Notice of Construction Acceptance of the Public Improvements, which time period may be extended in the Town's discretion due to remedial or repair work that may be necessary in the first two (2) years by providing written notice to Developer, Developer shall make a written request to the Town Manager for a final inspection of the Public Improvements and the landscaping ("Final Acceptance"). If the Town Engineer determines that the Public Improvements are free of defects in materials and workmanship and have been repaired and maintained to the extent required and the landscaping is established, the Town Manager shall provide certification of completion by issuance of a Notice of Final Acceptance. If the Town Engineer determines that the Public Improvements are not free of defects in materials and workmanship and have not been repaired and maintained to the extent required or that the landscaping is not properly established, the Town

Manager shall issue a written notice of non-compliance specifying the defects. Developer shall take such action as is necessary to cure the noncompliance and, upon curing the same, provide a new written request to the Town Manager for a final inspection of the Public Improvements and the landscaping. Failure of the Developer to make a timely request for the issuance of a Notice of Final Acceptance shall not limit the Town's rights hereunder nor shall it limit the Town's right to utilize or operate the Public Improvements as the Town deems appropriate.

5.6 ***Owners' Association:*** Prior to Final Acceptance and prior to any further development approval as contemplated by Section 1 of **Exhibit B-3**, Developer shall establish an owners' association for the Development. Developer shall provide the Town with proposed covenants, bylaws and articles of incorporation for the owners' association. Upon written approval of the covenants, bylaws and articles of incorporation by the Town, the same shall be recorded with the Larimer County Clerk and Recorder and the owners' association shall thereafter be deemed to be established.

5.7 ***Dedication and Maintenance of Subdivision Improvements:*** Unless otherwise agreed by the Town and Developer: (1) the Public Improvements shall be owned, operated and maintained by the Town; (2) the Private Improvements shall be owned, operated and maintained, as appropriate by the Developer, the owner's association or a metropolitan district; and (3) the Dry-Utilities shall be owned, operated and maintained, as appropriate and otherwise authorized, by the Developer, the owner's association, a metropolitan or special district or the appropriate public utility company.

WATER AND SEWER SERVICE

6.1 The Town and Developer shall enter into a Water and Sewer Service Agreement setting forth their agreement concerning water rights dedication, preliminary projections of water and sewer demand and a commitment by the Town for water and sewer service to the Development. The Water and Sewer Service Agreement, whenever executed, shall be incorporated into this Agreement and made a part hereof.

6.2 If the Water and Sewer Service Agreement ("WSSA") contemplates that the Developer use "Low Water Landscaping" for a designated portion of the Development, such obligation is a material term of this Agreement and shall continue during and subsequent to construction of the Development and shall be a covenant running with the land. If, at any time, the amount of common area irrigated with Low Water Landscaping falls below the acreage indicated in Town-approved landscape plans, then additional raw water must be dedicated to the Town in the amount required by the Town pursuant to the Johnstown Municipal Code, as amended. For purposes of the WSSA and for purposes of this Agreement, the term "Low Water Landscaping" means and consists of non-turf planting areas with beds mulched with rock or organic or inorganic materials and shrubs, trees and ornamental species planted low density and irrigated by automated

irrigation systems zoned separately from turf areas and equipped with a rain sensor shutoff. The application of Low Water Landscaping also includes xeriscape landscape principles and use of native shrubs and grasses.

6.3 If the Developer hereinafter desires to utilize a non-potable water system to irrigate the Development, or any part thereof, the Town and Developer shall enter into a subsequent agreement regarding such system and, if appropriate, amend the Water and Sewer Service Agreement.

6.4 **Stormwater and Detention Facilities.** The owners' association shall own and maintain the detention pond(s) in the Development. Developer shall provide the Town with a proposed "Operations and Maintenance Manual" for the detention pond for review and approval. Upon approval, Developer shall execute an Operations and Maintenance Agreement with the Town addressing, among other issues, notification and remedies related to the operations, maintenance and repair of the detention pond. The Operations and Maintenance Agreement shall be executed prior to receipt of the Notice of Construction Acceptance.

BUILDING PERMITS

7.1 The Town shall not issue building permits or install water meters for the Development until: (1) the Final Plat has been recorded with the Larimer County Clerk and Recorder; (2) Developer has paid all applicable use tax due and owing to the Town and all other fees required by the Town, including but not limited to water and tap fees, impact fees, storm drainage fees, and others; (3) Developer has received written notice of Notice of Construction Acceptance of the Public Improvements and written notice of approval of the Private Improvements, with the exception of the improvements for which the Town has authorized an extension of time to complete; (4) Developer has executed the Operations and Maintenance Agreement related to the detention pond; (5) meter and curb stop pass inspection; (6) the parties have entered into a Water and Sewer Service Agreement; (7) Developer has established an owners association as set forth in Paragraph 5.6 above; and (8) all terms of this Agreement have been faithfully kept by Developer.

7.2 If at any time the Town determines that Developer is not in compliance with this Agreement, the Final Plat, the Resolution or the Approved Plans, the Town may withhold the issuance of building permits.

OPERATION STANDARDS

8.1 The operation of construction equipment outside an enclosed structure shall be prohibited between the hours of 8:00 p.m. or dusk, whichever is earlier, and 7:00 a.m. on weekdays and between the hours of 7:00 p.m. or dusk, whichever is earlier, and 8:00 a.m. on weekends and legal holidays. The Town Manager may, upon written application, alter the hours of operation for good cause by providing written notice to Developer.

8.2 The operation of construction equipment for the purpose of grading or constructing either surface improvements or underground utilities, either public or private, shall be prohibited between the hours of 8:00 p.m. or dusk, whichever is earlier, and 7:00 a.m. on weekdays and between the hours of 4:00 p.m. and 8:00 a.m. on legal holidays and weekends. The Town Manager may, upon written application, alter the hours of operation for good cause by providing written notice to Developer.

8.3 Developer agrees to control all weeds growing within the Development. Developer further agrees to use the appropriate herbicide and undertake mowing of the property within the Development.

8.4 Developer shall, at all times, keep the public right-of-way free from accumulation of waste material, rubbish, dirt and mud caused by Developer's operation. Developer shall remove such waste material, rubbish, dirt and mud no less than weekly and, at the completion of the work, shall promptly remove all debris waste materials, rubbish, dirt, mud, tools, construction equipment, machinery, building materials, trash containers, and portable toilets from the public right-of-way.

8.5 When the Town Engineer provides written notice that erosion, by wind or water, is likely to be an issue, Developer shall install temporary or permanent erosion control into the Development at the earliest practicable time. By way of explanation and without limitation, said control may consist of seeding of approved grasses, temporary dikes, gabions or other similar devices.

8.6 In the event that Developer fails to perform the work specified in Paragraphs 8.3, 8.4 or 8.5 within a reasonable time period after receiving written notice from the Town, not to exceed ten (10) days for the work specified in Paragraphs 8.3 and 8.4, the Town may, in addition to other remedies, including those set forth in Paragraph 7.3, perform the work required and charge Developer for said cost. Developer shall pay the Town for all costs incurred by the Town in the performance of the above said service within ten (10) days of the Town submitting an invoice for said services. If Developer does not remit the costs, in addition to other remedies, the Town may draw on the Maintenance Guarantee.

8.7 Developer hereby ensures that Developer's subcontractors shall cooperate with the Town's construction inspectors in all manners, including, but not limited to, by ceasing operations when winds are of sufficient velocity to create blowing dust which the Town, in its discretion, determines is hazardous to the public health and welfare.

8.8 Developer shall take all steps necessary to prevent its construction activities from damaging adjacent properties.

DEVELOPMENT STANDARDS

9.1 Developer shall comply with the requirements contained in the Annexation Agreement related to the Property, except as specifically amended by this Agreement.

9.2 Except as otherwise provided in this Agreement, the Final Plat, the Resolution or Approved Plans, Developer shall comply with the Johnstown Municipal Code, zoning ordinances, subdivision regulations, landscape guidelines and, if operative with respect to the Development, the approved design guidelines.

9.3 If the Property is included in a metropolitan district, Developer shall dedicate all outlots and tracts containing open space, park areas, and trails to such metropolitan district. The open spaces, parks, and trails shall be available for public use.

9.4 Developer shall adhere to the requirements of the Johnstown Municipal Code, Johnstown Design Guidelines, and Johnstown Standards and Specifications, as may be amended.

9.5 Developer shall take all necessary steps to prevent its construction activities from harming water quality, water bodies and wetlands. All drainage and holding ponds shall be kept free of standing water by whatever means possible including, but not limited to, pumping water out of any holding ponds.

LIABILITY, INSURANCE AND COST REIMBURSEMENT

10.1 ***Indemnification***: Developer hereby agrees to indemnify and hold the Town, Town Officials, its employees, agents, representatives, insurers and self insurance pool harmless from and against any and all suits, demands, actions, damages, liability, losses, claims, fees and expenses, including attorney's fees, resulting or arising in any way from any breach or default of this Agreement or any acts or omissions of Developer, its employees, agents, consultants, representatives or subcontractors, except to the extent caused by gross negligence or willful misconduct of the Town. Developer shall promptly investigate, handle, respond to, and provide defense for and defend against any such liability, claims or demands at the sole expense of

Developer. Developer also agrees to bear all costs, expenses and attorney's fees related thereto whether or not such liability, claims or demands are groundless, false or fraudulent.

10.2 ***Insurance:*** Developer shall for itself and for its contractors, subcontractors, representatives and agents engaged in the design, construction or installation of the Public Improvements and Private Improvements maintain such liability insurance including general liability, contractors liability, professional liability, comprehensive automobile liability and sufficient public liability insurance as will protect the Town, Town Officials, its employees, agents and representatives against any and all potential liability, claims, damage, demands, losses, and expenses which may be incurred or asserted pursuant to Paragraph 10.1 above. Liability insurance shall be in the minimum amount of One Million Dollars ($1,000,000.00) per occurrence and Two Million Dollars ($2,000,000.00) aggregate, or such greater amounts as may be established by the Colorado Governmental Immunity Act, §§ 24-10-101 *et seq.*, C.R.S., as may be amended. Whenever requested by the Town Manager, Developer agrees to promptly submit certificates of insurance evidencing sufficient amounts, types and duration of insurance and which show the Town, Town Officials, its employees, agents and representatives as additional insureds. Developer shall not be relieved of any liability, claims, demands or other obligations assumed or set forth in this Development Agreement by reason of its failure to procure or maintain such insurance, or by reason of its failure to procure or maintain insurance in sufficient amounts, durations or types. In addition to the insurance specified above, Developer shall maintain workers compensation insurance, if so required by law, and shall require its contractors, subcontractors, representatives and agents engaged in the design, construction or installation of improvements to maintain workers compensation insurance in the amount required by law.

10.3 ***Drainage Liability***: Developer shall indemnify and hold the Town harmless from any liability the Town may have on account of any change in the nature, direction, quantity, or quality of drainage flow resulting from the Development. In addition, Developer shall reimburse the Town for any and all costs, fees, and expenses, including attorney's fees, which the Town incurs in acquiring any rights-of-way or easements which the Town is required to acquire or condemn or which the Town is held to have acquired or condemned for drainage as a result of this Development. This provision shall survive Final Acceptance and the termination of this Agreement.

10.4 ***Tax Liability***: Developer shall pay all outstanding taxes, encumbrances or obligations on any property dedicated or conveyed to the Town as part of the Development prior to or at the time of such dedication or conveyance, and shall indemnify and hold the Town harmless from any and all encumbrances, obligations or tax liability incurred prior to the dedication or conveyance to the Town. Any use tax due for construction materials shall be paid prior to construction of any Development improvements.

10.5 ***Cost Reimbursement to Town***: Developer shall reimburse the Town for professional consultants, including, but not limited to engineers, testing companies and attorneys, engaged by the Town to process and complete the Development.

10.6 ***Colorado Governmental Immunity Act:*** Nothing in this Agreement shall be construed to waive, limit or otherwise modify any governmental immunity that may be available by the law to the Town, Town Officials, employees, or agents, or any other person acting on behalf of the Town and, in particular, governmental immunity afforded pursuant to the Colorado Governmental Immunity Act, §§ 24-10-101 *et seq.*, C.R.S., as amended.

DEFAULTS AND REMEDIES

11.1 A default by Developer shall exist if Developer fails to fulfill or perform any material obligation contained in this Agreement, the Final Plat, the Resolution, or the Approved Plans, or Developer fails to comply with the Town's ordinances, resolutions and regulations and all other applicable laws and regulations. In the event of a default, the Town shall deliver written notice to Developer of such default and Developer shall have ten (10) days from receipt of such notice to cure the default. If the default is not of a type that may be cured within such ten (10) day period, Developer may provide written notice to the Town within such period that it is actively and diligently pursuing such cure and Developer shall thereafter have a reasonable time to cure the default, provided that Developer is at all times within that extended period actively and diligently pursuing a cure. In case of emergency, as determined by the Town, such written notice shall be deemed waived and the Town may proceed as it deems necessary at the expense of Developer or the issuers of the Maintenance or Performance Guarantee.

11.2 If the default arises subsequent to the issuance of the Notice of Construction Acceptance and the default is not timely cured, the Town may draw on the Maintenance Guarantee. If the default relates to the improvement secured by the Performance Guarantee and the default is not timely cured, the Town may draw on the Performance Guarantee. In addition, and without limitation, if the default is not timely cured, the Town may withhold approval of any or all building permits, certificates of occupancy, water meters or tap hook-ups for any area within the Development. Notwithstanding these rights and remedies, the Town may pursue whatever additional remedies it may have against Developer or anyone, either at law, equity or pursuant to this Agreement. The Town's remedies shall be cumulative.

11.3 Should Developer default in any obligation under this Agreement, the Town may, in its discretion, complete such Subdivision Improvements at Developer's expense. The Town shall estimate the cost of such improvements and give notice to Developer to pay such cost estimate. The Town shall use such payment for said improvements and refund any money collected in excess of the actual cost of said improvements. Should payment not be made within

thirty (30) days of such notice, the Town may assess the amount of the cost estimate, plus ten percent (10%) to defray the cost of collection as provided by state law, to Lots 1 through 3 and file a lien against Lots 1 through 3, such lien to have priority over all liens except general taxes and prior special assessments and to be placed upon the tax list for the current year to be collected in the same manner as taxes are collected. The Town may file such lien at any time after said thirty (30) days while Developer is in default of this Agreement.

SPECIAL PROVISIONS

12.1 The Additional Terms, Conditions or Provisions relating to this Development are set forth in **Exhibit B-3**, which is attached hereto, incorporated herein by this reference, and made a part of this Agreement.

MISCELLANEOUS

13.1 ***No Waiver***: Delays in enforcement or the waiver of any one or more breaches of this Agreement by the Town shall not constitute a waiver of any of the remaining terms or obligations.

13.2 ***Severability***: If any provisions or parts of this Agreement are judged to be unenforceable or invalid, to the extent practicable, such judgment shall not affect, impair or invalidate the remaining parts of this Agreement, the intention being that the various parts and provisions hereof are severable.

13.3 ***Recording of Agreement***: This Agreement shall be recorded with the approved Final Plat and shall be a covenant running with and against all the Property, property rights and improvements contained therein in order to put prospective owners, purchasers, successors, assigns, and others acquiring any interest in the Property on notice as to the terms and obligations herein; provided however that the obligations of Developer set forth herein shall be covenants running with and against Lots 1 through 3 only. Except as otherwise provided herein, no lots, tracts or parcels may be separately conveyed prior to recording the Agreement and the Final Plat.

13.4 ***Binding Effect***: Unless otherwise provided herein, this Agreement shall be binding upon Johnson Taylor's heirs, successors, assigns, transferees and any other person or entity acquiring or purchasing any interest in any of the Property. This Agreement shall be of no effect until and unless Closing occurs. By signing, the Town authorizes and directs the closing agent responsible for conducting the Closing to record the Final Plat and this Agreement in accordance with the provisions of this section. Immediately following Closing the closing agent is directed to record the following instruments in the order in which they are listed with the Larimer County Clerk and Recorder:

a. The Final Plat.

b. This Agreement.

c. The deed or deeds from Johnson-Taylor conveying Lots 1 through 3 to Yopp and/or the Trust.

It is the intent of the Parties that all of the recording steps described in this section 13.4 are interdependent and that none of them should occur before they all occur. The Parties shall cooperate with each other and shall execute and deliver, or cause to be delivered, all other instruments and shall take all other actions, as any party hereto may reasonably request from time to time in order to effectuate the provisions hereof.

13.5 ***Transfer or Assignments***: In the event of a sale or transfer of any portion of the Development, except to a bona fide residential home buyer of a completed owner-occupied home, the seller or transferor and the purchaser or transferee shall be jointly and severally liable for the performance of each of the obligations contained in this Agreement unless, prior to the transfer or the sale, a written agreement satisfactory to the Town delineating and allocating the various rights and obligations for the Subdivision Improvements has been approved and executed by the Town Council.

13.6 ***Title and Authority***: Johnson-Taylor expressly warrants and represents to the Town that it is the record owner of the Property and further represents and warrants that the undersigned has full power and authority to enter into this Agreement on its behalf. Yopp and the Trust expressly warrant and represent to the Town that they are under contract to purchase Lots 1 through 3 from Johnson-Taylor and further represent and warrant that the undersigned have full power and authority to enter into this Agreement on their behalf. Johnson-Taylor and Developer understand that the Town is relying on the representations and warranties contained herein in approving and entering into this Agreement.

13.7 ***Notice:*** All notices, consents, applications or other instruments provided for under this Agreement shall be deemed properly given and received: (1) when personally delivered and received, when sent by messenger service, or when forwarded by facsimile or e-mail delivery, but only upon confirmation of receipt of such facsimile or e-mail; (2) on the next day after deposit for delivery with a nationally-recognized overnight courier service; or (3) three business days after deposit in the United States mail, by certified mail with return receipt requested, postage prepaid and addressed as follows:

TO JOHNSON-TAYLOR:

Johnson-Taylor Family Properties LLLP
Attention: Chauncey Taylor
2409 Lake Drive
Loveland, CO 80538

TO TOWN:

TOWN OF JOHNSTOWN
Attention: TOWN MANAGER
450 So. Parish
P. O. Box 609
Johnstown, CO 80534

TO DEVELOPER:

Yopp Ltd.
810 Taylor Ave.
Loveland, CO 80537

-and-

Sandra L. S. Aste Revocable Trust
1815 South County Road 13C
Loveland, CO 80537

13.8 ***Costs and Attorney Fees.*** If the Developer breaches this Agreement, the Developer shall pay the Town's reasonable costs and expenses, including attorney's fees, incurred in the enforcement of the terms, conditions and obligations of this Agreement. Nothing herein shall be construed to prevent or interfere with the Town's rights and remedies specified elsewhere in the Agreement.

13.9 ***Vested Right.*** The Final Plat shall have vested rights for a period of three (3) years from the date of this Agreement.

13.10 ***Warranty of Developer:*** Developer warrants that the Subdivision Improvements shall be installed in a good and workmanlike manner and in compliance with the Approved Plans, this Agreement, the Final Plat, the Resolution, the Town's ordinances, resolutions and regulations and all other applicable laws and regulations and shall be substantially free of any defects in materials and workmanship.

13.11 ***Governing Law and Venue***. This Agreement and the interpretation thereof shall be governed by the laws of the State of Colorado and Municipal Code of the Town of Johnstown. Venue for any claim, proceeding or action arising out of this Agreement shall be in Larimer County, Colorado.

13.12 ***No Presumption.*** Each party acknowledges that it has obtained, or has had the opportunity to obtain, the advice of legal counsel of its own choosing in connection with the negotiation and execution of this Agreement and with respect to all matters set forth herein. In the event of any dispute, disagreement or controversy arising from this Agreement, the parties shall

be considered joint authors and no provision shall be interpreted against any party because of authorship.

13.13 ***Entire Agreement.*** This Agreement constitutes the entire agreement and understanding between the parties and supersedes all prior agreements or understandings. Any amendment to this Agreement must be in writing and signed by the parties.

13.14 ***Compliance with the Law***. Developer shall comply with all federal, state and local laws and regulations in the performance of the obligations under this Agreement.

13.15 ***No Third Party Beneficiaries.*** No person or entity, other than a party to this Agreement, shall have any right of action under this Agreement including, but not limited to, lenders, lot or home buyers and materialmen, laborers or others providing work, services or materials for the Subdivision Improvements.

13.16 ***Force Majeure.*** Neither party shall be liable for a failure to perform hereunder if such failure is the result of force majeure, which shall mean causes beyond the reasonable control of a party such as acts of God, labor strikes, war, terrorism, fire or action or inaction of government authorities.

13.17 ***Headings.*** The paragraph headings herein are for the convenience and reference of the parties and are not intended to define or limit the scope or intent of this Agreement.

(Signatures on subsequent pages.)

IN WITNESS WHEREOF, and agreeing to be fully bound by the terms of this Agreement, the parties have set their hands below on this 22 day of FEBruary, 2022.

OWNER

Johnson-Taylor Family Properties LLLP

By: Chauncey Taylor

ATTEST:

Secretary/Member Date
(SEAL)

STATE OF COLORADO)
) ss.
COUNTY OF LARIMER)

SUBSCRIBED AND SWORN to before me this 22nd day of February, 2022, by Chauncey Taylor.

WITNESS my hand and official seal.

My commission expires: 1-15-2024

MAYRA GRISELDA JOHANN
Notary Public
State of Colorado
Notary ID # 20204001937
My Commission Expires 01-15-2024

Mayra G. Johann
Notary Public

DEVELOPER

Yopp Ltd.

By:_____
Benjamin A. Aste, Member

ATTEST:

_____

_____
Secretary/Member Date
(SEAL)

STATE OF COLORADO)
) ss.
COUNTY OF Larimer)

SUBSCRIBED AND SWORN to before me this 21st day of February, 2022, by Benjamin R. Aste, Jr.

WITNESS my hand and official seal.

My commission expires:

DONNA SCHNEIDER
NOTARY PUBLIC
STATE OF COLORADO
NOTARY ID 20144009466
MY COMMISSION EXPIRES FEB 27, 2022

Donna Schneider
Notary Public

DEVELOPER

Sandra L.S. Aste Revocable Trust

By: _____
Sandra L.S. Aste, Trustee

ATTEST:

_____

_____
Secretary/Member Date
(SEAL)

STATE OF COLORADO)
) ss.
COUNTY OF Larimer)

SUBSCRIBED AND SWORN to before me this 21st day of February, 2022, by Sandra L.S. Aste.

WITNESS my hand and official seal.

My commission expires:

DONNA SCHNEIDER
NOTARY PUBLIC
STATE OF COLORADO
NOTARY ID 20144009466
MY COMMISSION EXPIRES FEB 27, 2022

_____
Notary Public

TOWN OF JOHNSTOWN, COLORADO
a municipal corporation

By: _____
Mayor

ATTEST:

By: _____
Town Clerk

SUBDIVISION DEVELOPMENT AND IMPROVEMENT AGREEMENT
FOR
THE TOWN OF JOHNSTOWN

(Uncle Benny's Marketplace Re-subdivision)

EXHIBITS

TABLE OF CONTENTS

EXHIBIT A:	Legal Description of the Property
EXHIBIT B-1:	Copy of Final Plat
EXHIBIT B-2:	Town Resolution Approving Development
EXHIBIT B-3:	Additional Terms, Conditions or Provisions
EXHIBIT C:	Irrevocable Letter of Credit Form

EXHIBIT A

LEGAL DESCRIPTION
(Property)

PLS Corporation
Surveying • Mapping
532 West 66th Street • Loveland, Colorado 80538
970.669.2100 office • info@plscorporation.com

Submittal #1
UNCLE BENNY'S MARKETPLACE, MINOR RE-SUBDIVISION
Legal Description
8.3.2021

Legal Description:

Lot 1, Minor Re-Subdivision, being a Replat of Lot 2 of the Replat of Lot 1 of Replat "A" of Lot 2, of the Amended Plat of Great Colorado Marketplace Minor Re-Subdivision, County of Larimer, State of Colorado
and
Lot 2, Minor Re-Subdivision/Lot Line Adjustment, Replat of Lot 2, Minor Re-Subdivision of Replat of Lot 2 of Replat of Lot 1 of Replat "A" of Lot 2, of the Amended Plat of Great Colorado Marketplace Subdivision, County of Larimer, State of Colorado.

EXHIBIT B-1

PLAT

(SEE ATTACHED)

UNCLE BENNY'S MARKETPLACE RE-SUBDIVISION

Being a Replat of
LOT 1, MINOR RE-SUBDIVISION, BEING A REPLAT OF LOT 2 OF THE REPLAT OF LOT 1 OF REPLAT "A" OF LOT 2, OF THE AMENDED PLAT OF GREAT COLORADO MARKETPLACE MINOR RE-SUBDIVISION
and
LOT 2, MINOR RE-SUBDIVISION / LOT LINE ADJUSTMENT, REPLAT OF LOT 2, MINOR RE-SUBDIVISION OF REPLAT OF LOT 2 OF REPLAT OF LOT 1 OF REPLAT "A" OF LOT 2, OF THE AMENDED PLAT OF GREAT COLORADO MARKETPLACE SUBDIVISION,
Located in the Northwest 1/4 of Section 35, Township 5 North, Range 68 West of the 6th Principal Meridian, Town of Johnstown, Larimer County, Colorado

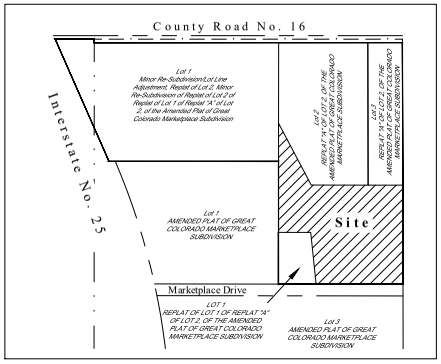

Vicinity Map
1" = 500'

Ownership and Dedication:

Know all men by these presents that the undersigned, being the owners, and/or lien holder of that part of the Northwest 1/4 of Section 35, Township 5 North, Range 68 West of the 6th Principal Meridian, Larimer County, Colorado, being more particularly described as follows:

Lot 1, Minor Re-Subdivision, being a Replat of Lot 2 of the Replat of Lot 1 of Replat "A" of Lot 2, of the Amended Plat of Great Colorado Marketplace Minor Re-Subdivision, County of Larimer, State of Colorado
and
Lot 2, Minor Re-Subdivision/Lot Line Adjustment, Replat of Lot 2, Minor Re-Subdivision of Replat of Lot 2 of Replat of Lot 1 of Replat "A" of Lot 2, of the Amended Plat of Great Colorado Marketplace Subdivision, County of Larimer, State of Colorado.

Containing 18.450 acres (more or less) being subject to any easements or right of ways of record;
have by these presents caused the same to be surveyed and subdivided into lots to be known as Minor Re-Subdivision, being a UNCLE BENNY'S MARKETPLACE RE-SUBDIVISION forever hereafter the streets as are laid out and designated on this plat and do also reserve perpetual easements for the installation and maintenance of utilities and for irrigation and drainage facilities as are laid out and designated on this plat,
witness our hands and seals this ____ day of _____, 20___.

Owner:_____
Johnson - Taylor Family Properties, LLLP

State of Colorado)
)SS
County of)

The foregoing dedication was acknowledged before me this this ____day of _____, 20___, by _____.

_____ _____
My commission expires Notary Public

TOWN COUNCIL:

This plat, to be known as UNCLE BENNY'S MARKETPLACE MINOR RE-SUBDIVISION, is approved and accepted by the Town of Johnstown, by Resolution Number _____, passed and adopted on final reading at a regular meeting of the Town Council of the Town of Johnstown, Colorado held on the _____ day of _____, 20____.

By: _____ Attest: _____
Mayor Town Clerk

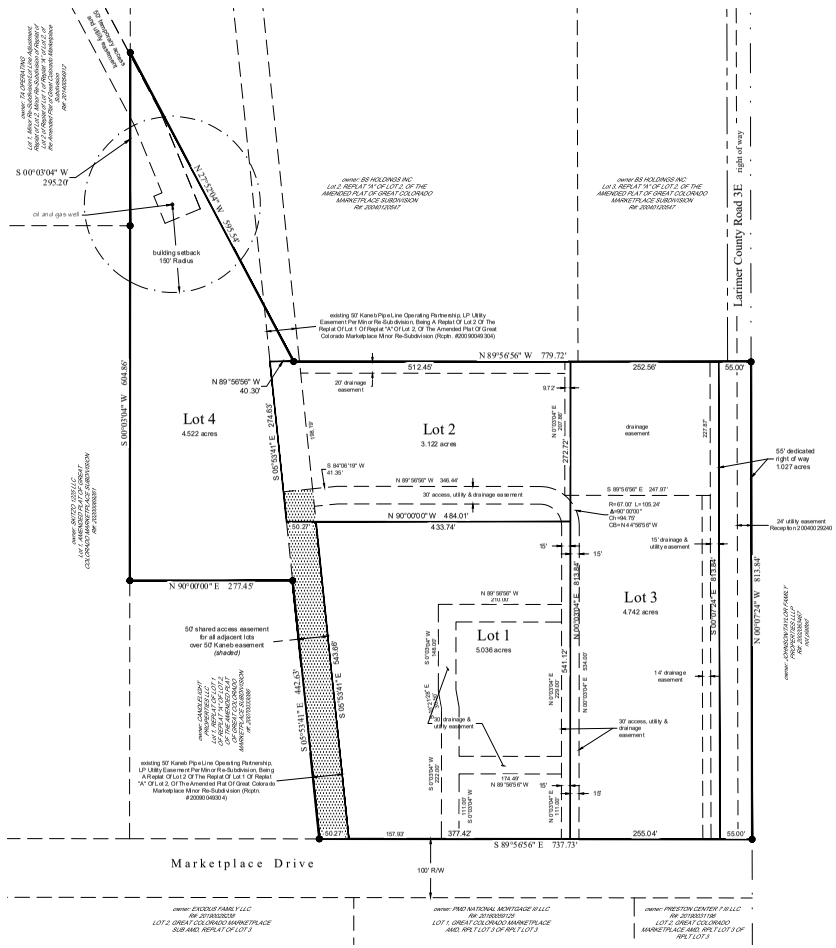

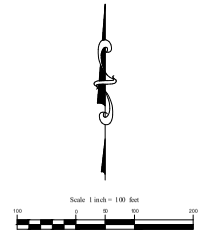

Legend

- ▲ denotes found 1/2" rebar with 1" plastic cap marked "LS 16418"
- ● denotes found 1/2" rebar with 1" plastic cap marked "PLS 32444"
- denotes easement
- denotes Lot line
- denotes boundary line
- denotes right of way line

Notes:

- Distances shown are in U.S. Survey Feet
- The total area contains 18.450 acres, more or less.
- No construction drawings have been reviewed or approved by the Town in regards to this subdivision. These lots will be considered un-buildable until such a time as construction drawings have been reviewed and approved by the Town for any lot proposing development. Said plans and development shall meet the Town requirements in place at such time as said development is proposed.

SURVEYOR'S STATEMENT

I, M. Bryan Short, a Colorado Registered Professional Land Surveyor, do hereby state that this Minor Re-Subdivision truly and correctly represents the results of a survey made by me or under my direct supervision.

_____
Colorado Registered Land Surveyor #32444

NOTICE: According to Colorado law you must commence any legal action based upon any defect in this survey within three years after you first discover such defect. In no event, may any action based upon any defect in this survey be commenced more than ten years from the date of the certification shown hereon.

Item #4.

REVISIONS						
By	Description					
By	Description					
By mbs	Description	revised per 8-3-2021 redlines				

Field Date	n/a	ST	n/a
Party Chief	n/a	PM	BAB
Print Date	September 10, 2021	PLS	MBS

CLIENT
Uncle Benny's Building Supplies LLC

PLS Corporation
532 West 66th Street, Loveland, Colorado 80538
Phone: 970.669.2100 - Info@plscorporation.com

TITLE
Final Subdivision Plat - Minor Re-Subdivision
UNCLE BENNY'S MARKETPLACE
Section 35, Township 5 North, Range 68 West, 6th P.M., Larimer County, Colorado

PROJECT NO. 13046.009

SHEET NO. 1

EXHIBIT B-2

RESOLUTION APPROVING PLAT

(SEE ATTACHED)

EXHIBIT B-3

ADDITIONAL TERMS, CONDITIONS OR PROVISIONS

1. Notwithstanding any provision in the Agreement to the contrary, the Parties recognize and agree that Johnson-Taylor has sought and obtained approval of the Final Plat without the current intent to develop the Property and install the Subdivision Improvements. The Parties are executing this Agreement in order that Developer's rights and obligations with respect to the Development and the construction and installation of the Subdivision Improvements are mutually understood, agreed-upon, run with Lots 1 through 3, and are binding upon Developer's heirs, successors, assigns, transferees and any other person or entity acquiring or purchasing any interest in any of the Development. Prior to development of any portion of the Property, the property owner or developer of such portion of the Property shall execute an amendment to this Agreement or a separate agreement with the Town addressing development of such portion of the Property and the special conditions, if any, related thereto. No developer or owner shall construct Public Improvements without first obtaining Town approval of Civil Engineering Construction Plans applicable to such portion of the Property nor shall a Developer construct Private Improvements without first obtaining Town approval of a Site Development Plan applicable to such portion of the Property. It is the intent of Johnson-Taylor to use Lot 4 for future development, possibly including expansion of the Candlelight Dinner Playhouse. Nothing in this Agreement shall be construed to impose on Developer any cost of future development of Lot 4.

2. The Public Improvements may include, but are not limited to, the construction of, or financial participation in, water and sanitary sewer extensions in the right-of-way and street construction of Marketplace Drive and street construction of Larimer County Road 3E along the frontage of the Property. Cost-sharing or reimbursement agreements, on pro rata basis, may be available for the improvements that benefit surrounding properties.

EXHIBIT C

FORM--IRREVOCABLE LETTER OF CREDIT

NAME OF ISSUING BANK_____
ADDRESS OF ISSUING BANK_____

Town of Johnstown
450 So. Parish
P. O. Box 609
Johnstown, CO 80534

ATTENTION: TOWN OF JOHNSTOWN ATTORNEY AND TOWN MANAGER

We hereby establish, at the request and for the account of this Irrevocable Letter of Credit in favor of the Town of Johnstown in the amount of $_____. The purpose of this Letter of Credit is to secure performance of a Development Agreement for _____, dated this day _____of _____, 20____, between the Town of Johnstown and _____.

You are hereby authorized to draw on sight by drafts or written demands up to the aggregate amount of $_____. The sole condition for payment of any demand made or draft drawn against this Irrevocable Letter of Credit is that the Town's demand or draft be accompanied by a letter, on the Town's stationery, signed by the Town Manager to the effect that "the Town of Johnstown has declared a default under the Development Agreement."

Partial and multiple drawings are permitted hereunder.

We hereby agree with the Town of Johnstown and its drawers, endorsers, and bona fide holders of demands made or drafts negotiated under this Letter of Credit that the same shall be duly honored upon presentation and delivery of the documents as specified above.

This Irrevocable Letter of Credit is not transferable.

This Letter of Credit shall be for a twelve (12) month term from the date of execution hereof. It is a condition of this Letter of Credit that it shall be automatically renewed, without amendment, for additional periods of one year each from the present or any future expiration date, unless, at least

sixty (60) calendar days prior to the effective expiration date, the Town Manager notifies you in writing delivered by certified U.S. mail, return receipt requested, to your address set forth above that the Town of Johnstown elects not to renew this Letter of Credit for any further additional period. Upon your receipt of our written notification of impending expiration, you may draw the unused balance of this Irrevocable Credit upon your written demand or your sight draft.

With the exception of C.R.S. §4-5-108(b) concerning the period of time in which to honor or reject a draft, demand or credit, this Letter of Credit shall be governed and construed in accordance with the laws of the State of Colorado. In the event of a conflict between the provisions of the Colorado Uniform Commercial Code and the provisions hereof, the provisions hereof shall control.

Signed this _____ day of _____, 20_____.

Issuing Bank:_____

By:_____

Officer's Title:_____

Address:_____

STATE OF)
) ss.
COUNTY OF)

SUBSCRIBED AND SWORN to before me this _____ day of _____, 20_____, by _____ as the_____of_____.

WITNESS my hand and official seal.

My commission expires:

_____
Notary Public

Town of Johnstown

TOWN COUNCIL CONSENT AGENDA COMMUNICATIONS

AGENDA DATE: March 7, 2022

SUBJECT: Second Amendment to the Franchise Agreement Town of Johnstown, Colorado and TDS Broadband, LLC

ATTACHMENTS: 1. Second Amendment to the Franchise Agreement

PRESENTED BY: Matt LeCerf, Town Manager

AGENDA ITEM DESCRIPTION:
Enclosed for your review and consideration is a second amendment to the Franchise Agreement between the Town of Johnstown and TDS Broadband, LLC (TDS Telecom). This amendment will extend the current franchise agreement currently in place until September 1, 2022 or unless a new franchise is adopted prior to this extension expiring. Both parities continue to move forward on a new franchise agreement, which is planned to be a 10-year term expiring on Dec 31, 2031.

LEGAL ADVICE:

The Town Attorney reviewed the first amendment presented.

FINANCIAL ADVICE:

Not Applicable.

RECCOMMENDED ACTION: Approve the Second Amendment to the Franchise Agreement as presented.

Reviewed and Approved for Presentation,

Town Manager

SECOND AMENDMENT TO FRANCHISE AGREEMENT
TOWN OF JOHNSTOWN, COLORADO
AND
TDS BROADBAND SERVICE, LLC

This Second Amendment to the Franchise is made and entered by and between the Town of Johnstown, Colorado, a Colorado home rule municipal corporation ("Town"), and TDS Broadband Service LLC, a Delaware limited liability company ("TDS") (collectively, the "Parties"), upon the following terms and conditions:

1. On or about December 17, 2012, the Town and Baja Broadband, LLC ("Baja") entered into a Cable Television Franchise that granted a franchise to Baja to provide cable-related services in the Town ("Franchise"). Through acquisitions and changes of ownership, TDS owns and operates the cable system and has been operating under and pursuant to the terms of the Franchise.

2. Pursuant to Section 2.3, the Franchise terminates on December 20, 2021. The Parties desire to negotiate a new franchise to extend the franchise, upon agreeable terms, for an additional ten (10) years, to and including December 31, 2031. Because the Parties have not yet finalized the new franchise, the Parties desire to extend the term of the Franchise for a short duration and continue operating under the terms of the existing Franchise.

3. Section 13 of the Franchise contemplates renewal of the Franchise and Section 15.5 of the Franchise provides that the Parties may amend the terms of the Franchise.

4. To allow the Parties additional time to execute a new franchise, on or about November 15, 2021, the Parties executed the First Amendment to Franchise Agreement, extending the term of the Franchise by four (4) months, to and including April 30, 2022. The Parties desire additional time within which to negotiate a new franchise, and thus seek a second extension of the term of the Franchise, up to and including September 1, 2022, or until the Parties execute a new franchise, whichever occurs first.

5. Except as amended herein, the Parties reaffirm the Franchise including but not limited to TDS's right to furnish, sell and distribute cable-related services in the Town and corresponding obligation to pay a franchise fee to the Town.

[Signatures on following page.]

IN WITNESS WHEREOF, this Second Amendment to Franchise is entered into by the Town and TDS effective as of March 7, 2022.

TOWN OF JOHNSTOWN, COLORADO

By: _____
Gary Lebsack, Mayor

Date of Signature: _____

ATTEST:

By: _____
Diana Seele, Town Clerk

TDS BROADBAND SERVICE, LLC

By:_____
Name:
Title:

STATE OF WISCONSIN)
) ss
COUNTY OF DANE)

SUBSCRIBED AND SWORN to before me this _____day of _____, 2022, by _____ as the _____ of _____.

WITNESS my hand and official seal.

My commission expires:_____

_____
Notary Public

Town of Johnstown

MEMORANDUM

TO: Honorable Mayor and Town Council Members

FROM: Matt LeCerf, Town Manager

DATE: March 7, 2022

CC: Town Staff
Local Media

SUBJECT: Town Manager's Report

Upcoming Town Council Meetings & Work Sessions – If there are topics that the Council would like staff to schedule for discussion, please let me know. The following topics are recommended for Council discussion (all meetings will be held in the Town Council Chambers unless otherwise indicated):

- 03/21/2022 – Regular Town Council Meeting
- 04/04/2022 – Regular Town Council Meeting
- 04/18/2022 – Regular Town Council Meeting

Administration, Finance, Planning, & Human Resources

- *Planning & Zoning Commission* – Met and held hearings on February 9 on multiple projects. Commissioner Puccetti resigned, leaving two open seats. PZC will interview candidates at the March 9 meeting to recommend two applicants to Council to fill those vacancies. Upcoming meetings/hearings are scheduled for March 9 and March 23.
- *Hiring* – A Police PT Administrative Technician, Customer Service Technician at Town Hall, and a Public Works Streets Maintenance I worker started recently.
- *Bird Micromobility Program Update* – Staff from several Town Departments met with Bird's representative to discuss the fleet and mobility services in Johnstown. Staff has decided at this time to not move forward with the program and will revaluate in the coming years.

- *Business Regional Survey Update* – The Town of Johnstown continues to partner with its economic development regional partners and stakeholders to gather local business feedback and input on the effects of the COVID-19 pandemic and identify continued areas of support that are needed to ensure our business community continues to thrive. The survey link officially closed on February 28.
- *Business View Magazine* – The Mayor and Town Manager were interviewed as part of a feature that will focus on the growth and development that the Town has been experiencing. The publication is tentatively set to be published in April, by Business View Magazine and will be circulated to C-level executives and firms throughout North America.
- *JDDA Executive Board Update* – The Town of Johnstown was able to secure a permanent seat on the JDDA Executive Board to ensure a continued partnership between the DDA and Town. The Economic Development Manager will serve as the representative of the Town on the JDDA board and will provide updates to the Town Manager.
- *Biz Walk* – The Town Manager and Economic Development Manager met with Ace Hardware and Northern Colorado Real Estate as part of February's Biz Walk. Biz Walk's are scheduled monthly with existing brick and mortar businesses in Johnstown.
- *Broadband* – The Town continues to move forward with the 4 communities collaboratively on the broadband initiative. We have engaged with a utility attorney to begin development of a franchise agreement that would be proposed to Allo Communications.
- *Charlotte Street DOLA Grant* – The Town submitted its application to DOLA for the Charlotte Street Grant. Award notifications are expected in June 2022 with a formal presentation to the selection committee sometime in May.
- *Leadership Northern Colorado* – The Town Manager participated in a City/Town Manager speaking panel for Leadership Northern Colorado about Leadership and City Management.

Police Department

Training:

- *Intoxilyzer I-9000* – Officer Jaramillo received his Intoxilyzer I-9000 certificate through the Colorado Department of Public Health and Environment. He is now certified to run the I-9000, which is the Evidential Breath Alcohol Testing instrument used by law enforcement agencies in Colorado to determine whether a person was driving under the influence of alcohol.
- *Crisis Intervention Team* – Officer Kelley completed the Crisis Intervention Team (CIT) coaches' course and he is now certified to serve as a CIT coach anywhere in Colorado. Topics of this training included adult learning theory, scenario training theory and operations, and coaching practice with professional actors.

Community Policing, Outreach & Miscellaneous Items:

- *New Hire* – We are happy to bring Mark Cunningham on board as our part-time administrative technician for the North Sub Station. Mark brings years of law enforcement experience and will be a valuable member of the department.

Public Works and Utilities

Streets, Fleet & Parks

- *Staffing* – Public Works Staff conducted interviews for the 4 vacant street worker positions over the course of two days and extended one offer.
- *Traffic Concerns* – Staff met with the Gateway Development and the Weld County RE5J School District to discuss access and traffic concerns.
- *Northern Front Range Metropolitan Planning Organization (NFRMPO)* – Staff attended the Northern Front Range Metropolitan Planning Organization Transportation Advisory Committee meeting.
- *CDOT Meeting* – Staff met with CDOT to discuss I-25 improvement timing and the I-25 and Hwy 60 bridge aesthetic project.
- *Snow Event* – Street crews spent last week keeping the roads de-iced and storm drains clear.
- *Clean Up Day* – Crews are gearing up and planning for the spring-cleaning event to be held in April.
- *Preventative Maintenance* – Preventative Maintenance contracts are being developed for this year's maintenance program. Contracts are also being developed for turf maintenance this year for our parks.

Water Plant & System

- *Water Plant*
    - Fixed valve that controls the flows of raw water into the plant
    - Next project is automating North Pressure Release Valve (PRV) and Hwy 34 Tank levels
    - The Pilot program will start the week of March 7 for pre-treatment. During this time the Water Treatment Plan will be taken offline
- *Distribution System*
    - Warmer temps allowed for Patching of SH60 after the February 1, water main break.
    - We experienced a water main break in the Mountain View Townhomes Development that was quickly corrected.

Wastewater Plants & System

- *Central*
    - Scheduled additional cleaning of chloring contact basin
    - Evaluating self-cleaning bar screen at influent
    - Evaluating adding water to sludge to allow for easy of conveyance to ponds
    - Quarterly samples submitted to the State
- *Low Point*
    - Operations battling cold temperatures

  - Operation of SBR is now pumped to north side to process sludge
  - Installing lime injection at Low Point to help with alkalinity
  - Evaluating headworks building HVAC & Insulation
- *Collection*
  - Clearview Lift Station required both pumps to be rebuilt.
  - Corbett Glen lift station calling out due to low temps

Project Updates

- *Johnstown Reservoir Dam Repair* – Dredging operations are continuing. Contractor is completing construction of the outlet tower structure on east end and will be backfilling and reconstructing the dam. Town is anticipating starting to fill the reservoir during the month of April and is in communication with the CDW to restocking the lake.
- *South Water Tank* – The foundation for the South Water Tank has been completed and the red and white derrick erected for the tank shaft construction. Contractor is starting the construction of the base of the tank shaft and will be continuing upward.
- *South Water Tank Distribution Pipeline* – Project work is focused on completing waterline through farming properties on the south end of the project and installing a Hillsborough Ditch and a Farmers Ditch crossing before irrigation season. Town reached out to DCP to coordinate schedules for waterline installation through DCP mitigation area on WCR13.
- *Water Treatment Plant Expansion* – The Water Treatment Plant Expansion Project is in the site design phase. The Design Engineer has scheduled a pilot program for March to test the pre-treatment option proposed for the treatment plant.
- *Central Interceptor Phase 1* – Trunkline installation is complete. Lift Station is waiting on electrical components due to supply chain delays. New Lift Station start-up and old lift station decommissioning has been delayed until firm shipping date is received.
- *2nd Street Bridge* – Last week's freezing temperatures had the project on hold. Work has recommenced this week.
- *Old Town Drainage* – Last week's freezing temperatures had the project on hold. Work has recommenced.
- *Rolling Hills Playground* – The work is being scheduled for late April when temperatures are more conducive to installation of the pour-in-place material.
- *Charlotte Street* – The last neighborhood meeting is scheduled for March 1. A Council presentation on the project is scheduled for March 21.

Town of Johnstown

Item #7.

Capital Improvement Program

Charlotte Street Improvement Project

Troy White, Public Works Director

Town Council 3.7.22

Charlotte Street Project – Site Map

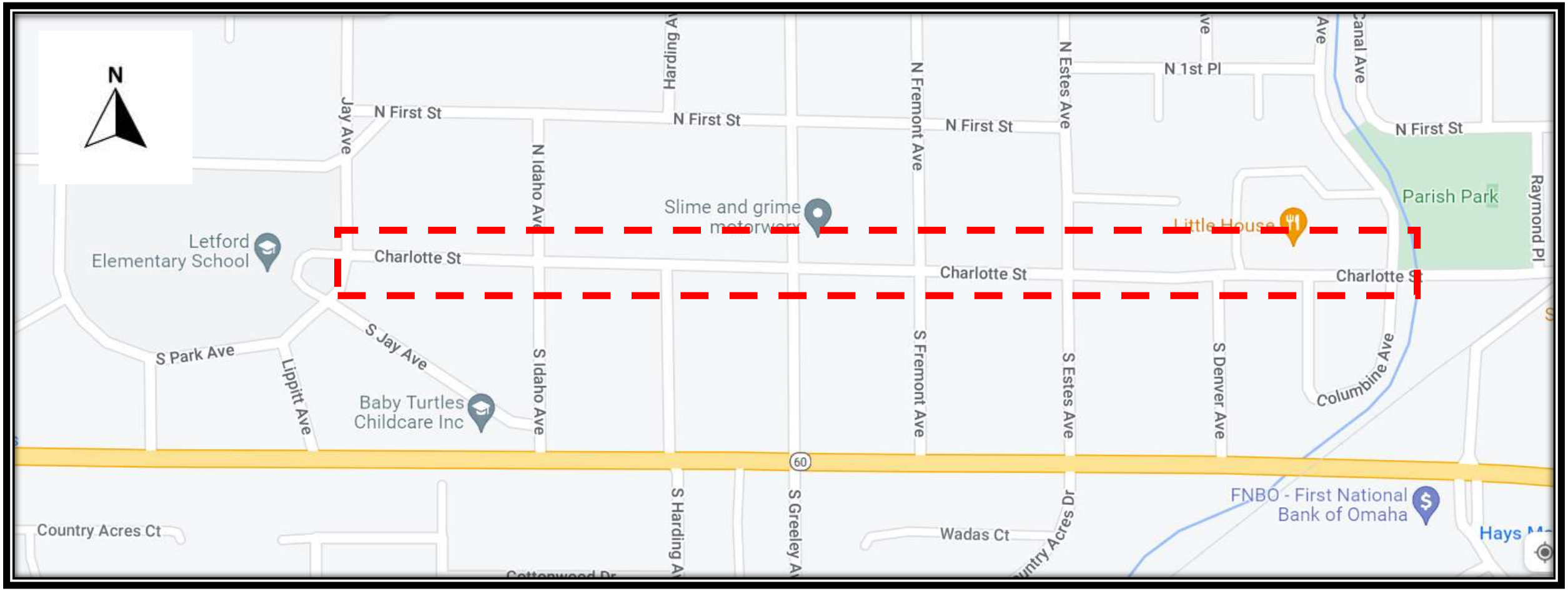

Courtesy Google Maps

Town of Johnstown

Charlotte Street Improvement Project

Project Background

- Council initiated Project 2020
- Design contract approved by Council in April 2021
- Council approved construction budget for Fiscal Year 2022

Town of Johnstown

Charlotte Street Improvement Project

Project Purpose

- Improve area drainage
- Upgrade existing sewer line
- Upgrade existing water line
- Fix intersection grades

Xcel- Upgrade existing gas line

Town of Johnstown

Charlotte Street Improvement Project

Project Public Outreach

- Open House May 2021
- Open House July 2021
- Open House January 2022
- Neighborhood Meeting March 2022

Social media, news releases, Town website

Town of Johnstown

Charlotte Street Improvement Project

Major Citizen Concerns

- Do not shrink roadway width - Addressed
- Save the trees - Addressed
- No bike lanes - Addressed
- Keep on-street parking - Addressed
- Provide sewer stubs – Addressed
- Allow options for landscape treatments - Addressed

Charlotte Street Improvement Project – Intersection Grade Improvements

Charlotte Street Improvement Project – Jay and Charlotte Intersecti

Install Crosswalks

Charlotte Street Improvement Project – Landscape Treatments

In-Kind

Charlotte Street Improvement Project – Landscape Treatments

Item #7.

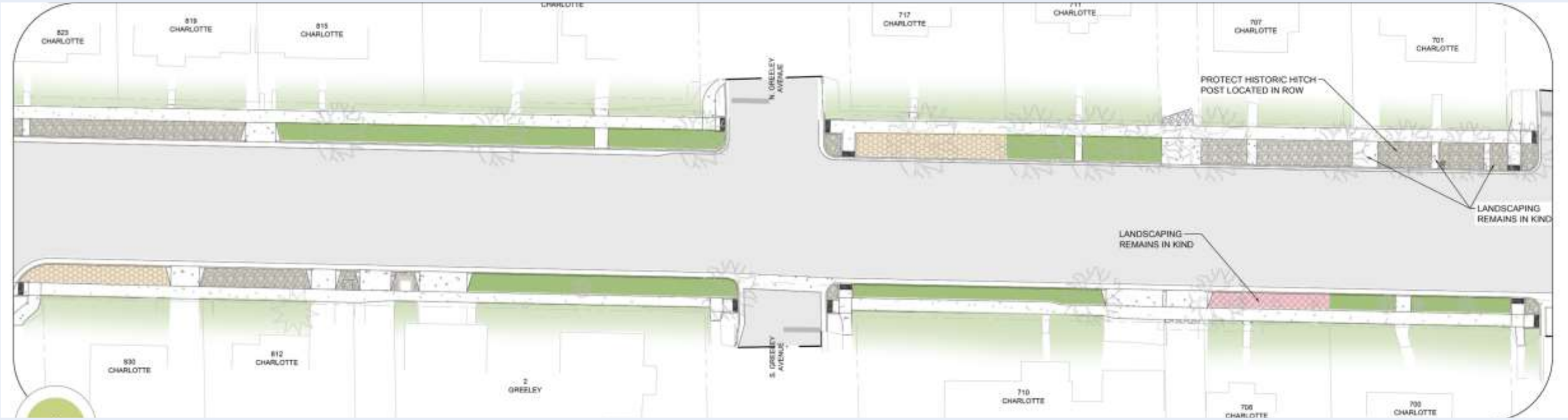

LEGEND

- LANDSCAPING REMAINS IN KIND
- GRAVEL MULCH
- COBBLE MULCH
- SOD

Town of Johnstown

Charlotte Street Improvement Project

Project Schedule

- March 2022 submitted for Energy Impact Grant
- March 2022 – Complete design
- June 2022 – Energy Impact Grant Decision
- July 2022 – Bid project
- September 2022 – Award project
- October 2022 – Arborist contract

*Construction schedule is determined by the Town and the Contractor upon award

Town of Johnstown

Charlotte Street Improvement Project

Questions/Comments

Town of Johnstown

TOWN COUNCIL AGENDA COMMUNICATIONS

AGENDA DATE: March 7, 2022

SUBJECT: Contract IGA Between Town of Johnstown and Colorado Department of Transportation for CP5 - Highway 60 and I-25 Aesthetic Improvements

ACTION PROPOSED: Consider Approval of the Contract IGA Subject to Final Form of Document Reviewed by Town Manager and Town Attorney

ATTACHMENTS: 1. DRAFT – IGA for CP5 Highway 60 and I-25 Aesthetic Improvements

PRESENTED BY: Matt LeCerf, Town Manager

AGENDA ITEM DESCRIPTION:

At the February 23, 2022 Town Council meeting, Council approved the final design cost associated with CP5 which is the Highway 60 and I-25 Aesthetic Improvements. An Intergovernmental Agreemet as part of this work is necessary between the Town and CDOT to ensure funds are dedicated for the project by the the Town and to proceed with the construction. The agreement attached is a DRAFT version of the IGA which will ultimately be completed by CDOT for Town approval. CDOT is attempting to keep this project moving as quickly as possible in the interest of keeping this project and the corridor improvements on track. To facilitate this objective, Town Staff is proposing approval of the enclosed Draft IGA in principle subject to the Town Manager and Town Attorney approving the final form of the agreement and with the understanding that the agreement does not change substantially.

The agreed upon maximum price for the project is $7,628,000.00.

LEGAL ADVICE:

The Town Attorney will work with the Town Manager to ensure the agreement meets the objectives of completing the aesthetic improvements.

FINANCIAL ADVICE:

Payments for the construction will be paid as monthly invoices are received with a maximum price of $7,628,000.00 as approved by Council on February 23, 2022.

RECOMMENDED ACTION: Approve the Contract IGA as presented subject to the Town Manager and Town Attorney approving the final form of the agreement.

SUGGESTED MOTIONS:

For Approval: I move to approve the Draft IGA between the Town of Johnstown and Colorado Department of Transportation for CP5 for the Highway 60 and I-25 aesthetic improvements, subject to final approval of the Contract IGA form by the Town Manager and Town Attorney. I further authorize the Town Manager to execute the contract in its final form.

For Denial: I move to deny the Draft IGA and request that the Town Manager bring back the final form of the agreement for Council approval at a future date when completed.

Reviewed and Approved for Presentation,

Town Manager

(Local $CDOTWRK)
PROJECT: NHPP 0253-275 (23019)

REGION: 4 (TCH)

CONTRACT

THIS CONTRACT, executed this _____ day of _____, _____ by and between the State of Colorado, for the use and benefit of the Colorado Department of Transportation ("State" or "CDOT") and TOWN OF JOHNSTOWN, 450 South Parish Avenue, PO Box 609, Johnstown, Colorado, 80534, CDOT Vendor #: 0002000319 ("Local Agency"), and the State and the Local Agency together shall be referred to as the "Parties."

RECITALS

1. Authority exists in the law and funds have been budgeted, appropriated and otherwise made available and a sufficient uncommitted balance thereof remains available for payment of project and Local Agency costs. Contract Amount: $7,628,000.00.
2. Required approval, clearance and coordination have been accomplished from and with appropriate agencies.
3. Section 43-2-102 and 103, C.R.S require the State to maintain state highways (including where such highways extend through a city or an incorporated town), and 43-2-135 describes certain specific responsibilities of the State and affected local entities (respectively) with respect to state highways that are also part of a local street system.
4. State funds may be awarded pursuant to Multimodal Transportation Options Funding ("MMOF"). MMOF means money transferred from the general fund to the fund pursuant to C.R.S. §§24-75-219 (5)(a)(III) and (5)(b)(III) and any other money that the general assembly may appropriate or transfer to the fund. These funds are subject to an expiration date.
5. The Local Agency has estimated the contribution and is prepared to provide the funding required for their contribution toward the Project, as may be evidenced by an appropriate ordinance or resolution duly passed and adopted by the authorized representatives of the Local Agency, which expressly authorizes the Local Agency to enter into this agreement and to expend its funds for the Contribution.
6. The Local Agency has funds available and desires to provide 100% of the funding for the Work. These funds may be MMOF.
7. This contract is executed under the authority of §§ 29-1-203, 43-1-110; 43-1-116, 43-2-101(4)(c) and 43-2-144, C.R.S.
8. The parties hereto desire to agree upon the division of responsibilities with regard to the project.

THE PARTIES NOW AGREE THAT:

Section 1. Scope of Work

The work under this Contract shall consist of CO 60B Johnstown Bridge and Interchange Aesthetics, and the Local Agency shall provide their Contribution toward the Project, in Johnstown, Colorado, as more specifically described in **Exhibit A**.

Section 2. Order of Precedence

In the event of conflicts or inconsistencies between this Contract and its exhibits, such conflicts or inconsistencies shall be resolved by reference to the documents in the following order of priority:

A. This Contract
B. **Exhibit A** (Scope of Work)
C. Other Exhibits in descending order of their attachment.

Section 3. Term

This Contract shall be effective upon approval of the CDOT Chief Engineer or designee and shall terminate on February 28, 2032, or sooner if any of the State's funding expires, or is sooner terminated or unless performance is extended in accordance with this Contract.

Section 4. Project Funding Provisions

A. The Local Agency has estimated the total cost of the Contribution and is prepared to provide its funding, as evidenced by an the signing of this Contract, which expressly authorizes the Local Agency the authority to expend its Contribution toward the Project.

B. The contribution is estimated to be $7,628,000.00.

C. **The maximum amount payable by the Local Agency under this contract shall not exceed $7,628,000.00** unless such amount is increased by an appropriate written modification to this contract executed by the Parties hereto before any increased cost is incurred

D The Parties hereto agree that this contract is contingent upon all funds designated for the project herein being made available from state sources, as applicable. Should these sources fail to provide necessary funds as agreed upon herein, the contract may be terminated by either party, provided that any party terminating its interest and obligations herein shall not be relieved of any obligations which existed prior to the effective date of such termination or which may occur as a result of such termination.

Section 5. Project Payment Provisions

A. The Local Agency will reimburse the State for incurred costs relative to the project following the Local Agency's review and approval of such charges, subject to the terms and conditions of this agreement.

B. If the Local Agency is to be billed for CDOT incurred costs, the billing procedure shall be as follows:

1. Upon receipt of each bill from the State, the Local Agency will remit to the State the amount billed no later than 60 days after receipt of each bill. Should the Local Agency fail to pay moneys due the State within 60 days of demand or within such other period as may be agreed between the parties hereto, the Local Agency agrees that, at the request of the State, the State Treasurer may withhold an equal amount from future apportionment due the Local Agency from the Highway Users Tax Fund and to pay such funds directly to the State. Interim funds, until the State is reimbursed, shall be payable from the State Highway Supplementary Fund (400).
2. If the Local Agency fails to make timely payment to the State as required by this section (within 60 days after the date of each bill), the Local Agency shall pay interest to the State at a rate of one percent per month on the amount of the payment which was not made in a timely manner, until the billing is paid in full. The interest shall accrue for the period from the required payment date to the date on which payment is made.

C. The State will prepare and submit to the Local Agency, no more than monthly, charges for costs incurred relative to the project. The State's invoices shall include a description of the amounts of services performed, the dates of performance and the amounts and description of reimbursable expenses. The invoices will be prepared in accordance with the State's standard policies, procedures and standardized billing format.

D. If the project is funded by MMOF, then the Local Agency must submit all documentation necessary to process the payments 30 days prior to end of State fiscal year. The State fiscal year ends June 30th. MMOF projects must submit final billing for all work 30 days prior to the end of the State fiscal year that funds expire. If MMOF are used, and the State knows that the funds will expire, the State shall promptly notify Local Agency of the expiration date. The State will promptly notify the Local Agency if that expiration date changes.

Section 6. State and Local Agency Commitments

The Scope of Work (**Exhibit A)** describes the work to be performed.

A. Design [if applicable]

1. If the work includes preliminary design or final design (the "Construction Plans"), or design work sheets, or special provisions and estimates (collectively referred to as the "Plans"), the State shall comply with the following requirements, as applicable:
   a. perform or provide the Plans, to the extent required by the nature of the work.

b. prepare final design (Construction Plans) in accord with the requirements of the latest edition of the American Association of State Highway Transportation Officials (AASHTO) manual or other standard, such as the Uniform Building Code, as approved by CDOT.
c. prepare special provisions and estimates in accord with the State's Roadway and Bridge Design Manuals and Standard Specifications for Road and Bridge Construction.
d. include details of any required detours in the Plans, in order to prevent any interference of the construction work and to protect the traveling public.
e. stamp the Plans produced by a Colorado Registered Professional Engineer.
f. provide final assembly of Plans and contract documents.
g. be responsible for the Plans being accurate and complete.
h. make no further changes in the Plans following the award of the construction contract except by agreement in writing between the parties. The Plans shall be considered final when approved and accepted by the parties hereto, and when final they shall be deemed incorporated herein.

B. Construction [if applicable]

1. If the work includes construction, the State shall perform the construction in accordance with the approved design plans and/or administer the construction all in accord with the Scope of Work (**Exhibit A**). Such administration shall include project inspection and testing; approving sources of materials; performing required plant and shop inspections; documentation of contract payments, testing and inspection activities; preparing and approving pay estimates; preparing, approving and securing the funding for contract modification orders and minor contract revisions; processing contractor claims; construction supervision; and meeting the Quality Control requirements of the FHWA/CDOT Stewardship Agreement.

2. Subject to Section 5, if the State is the responsible party:
   a. it shall appoint a qualified professional engineer, licensed in the State of Colorado, as the State Agency Project Engineer (SAPE), to perform that administration. The SAPE shall administer the project in accordance with this agreement, the requirements of the construction contract and applicable State procedures.
   b. if bids are to be let for the construction of the project, the State shall, in conjunction with the Local Agency, advertise the call for bids and upon concurrence by the Local Agency will award the construction contract(s) to the low responsive, responsible bidder(s).
      (1) in advertising and awarding the bid for the construction of a federal-aid project, the State shall comply with applicable requirements of 23 USC § 112 and 23 CFR Parts 633 and 635 and C.R.S. § 24-92-101 et seq. Those requirements include, without limitation, that the State/contractor shall incorporate Form 1273 in its entirety verbatim into any subcontract(s) for those services as terms and conditions therefore, as required by 23 CFR 633.102(e).
      (2) the Local Agency has the option to concur or not concur in the proposal of the apparent low bidder for work on which competitive bids have been received. The Local Agency must declare its concurrence or non-concurrence within 3 working days after said bids are publicly opened.
      (3) by indicating its concurrence in such award, the Local Agency, acting by or through its duly authorized representatives, agrees to provide additional funds, subject to their availability and appropriation for that purpose, if required to complete the work under this project if no additional federal-aid funds will be made available for the project.
   c. If all or part of the construction work is to be accomplished by State personnel (i.e. by force account), rather than by a competitive bidding process, the State will ensure that all such force account work is accomplished in accordance with the pertinent State specifications and requirements with 23 CFR 635, Subpart B, Force Account Construction.

Section 7. ROW Acquisition and Relocation

If the Project includes right of way, prior to this project being advertised for bids, the State will certify in writing that all right of way has been acquired in accordance with the applicable state and federal regulations, or that no additional right of way is required.

Any acquisition/relocation activities must comply with: all applicable federal and state statutes and regulations, including but not limited to the Uniform Relocation Assistance and Real Property Acquisition Policies Act of 1970 as amended (P.L. 91-646) and the Uniform Relocation Assistance and Real Property Acquisition Policies for Federal

and Federally Assisted Programs as amended (49 CFR Part 24); CDOT's Right of Way Manual; and CDOT's Policy and Procedural Directives.

Allocation of Responsibilities are as follows:

- Federal participation in right of way acquisition (3111 charges), relocation (3109 charges) activities, if any, and right of way incidentals (expenses incidental to acquisition/relocation of right of way – 3114 charges);
- Federal participation in right of way acquisition (3111 charges), relocation (3109 charges) but no participation in incidental expenses (3114 charges); or
- No federal participation in right of way acquisition (3111 charges) and relocation activities (3109 expenses).

Regardless of the option selected above, the State retains oversight responsibilities. The Local Agency's and the State's responsibilities for each option is specifically set forth in CDOT's Right of Way Manual. The manual is located at http://www.coloradodot.info/business/manuals/right-of-way.

If right of way is purchased for a state highway, including areas of influence of the state highway, the local agency shall immediately convey title to such right of way to CDOT after the Local Agency obtains title.

Section 8. Utilities

If necessary, the State will be responsible for obtaining the proper clearance or approval from any utility company, which may become involved in this Project. Prior to this Project being advertised for bids, the responsible party will certify in writing that all such clearances have been obtained.

Section 9. Railroads

In the event the Project involves modification of a railroad company's facilities whereby the work is to be accomplished by railroad company forces, the State shall make timely application to the Public Utilities Commission requesting its order providing for the installation of the proposed improvements and not proceed with that part of the work without compliance. The State shall also establish contact with the railroad company involved for the purpose of complying with applicable provisions of 23 CFR 646, subpart B, concerning federal-aid projects involving railroad facilities, including:

1. Executing an agreement setting out what work is to be accomplished and the location(s) thereof, and that the costs of the improvement shall be eligible for federal participation.
2. Obtaining the railroad's detailed estimate of the cost of the work.
3. Establishing future maintenance responsibilities for the proposed installation.
4. Prescribing future use or dispositions of the proposed improvements in the event of abandonment or elimination of a grade crossing.
5. Establishing future repair and/or replacement responsibilities in the event of accidental destruction or damage to the installation.

Section 10. Environmental Obligations

The State shall perform all work in accordance with the requirements of the current federal and state environmental regulations including the National Environmental Policy Act of 1969 (NEPA) as applicable.

Section 11. Maintenance Obligations

The Local Agency through issuance of specual use permit will maintain and operate the improvements constructed under this agreement at its own cost and expense during their useful life, in a manner satisfactory to the State and FHWA. The Local Agency through issuance of special use permit will make proper provisions for such maintenance obligations each year. Such maintenance and operations shall be conducted in accordance with all applicable statutes, ordinances and regulations. The State and FHWA will make periodic inspections of the project to verify that such improvements are being adequately maintained.

Section 12. Record Keeping

The State shall maintain a complete file of all records, documents, communications, and other written materials, which pertain to the costs incurred under this agreement. The State shall maintain such records for a period of three (3) years after the date of termination of this agreement or final payment hereunder, whichever is later, or for such further period as may be necessary to resolve any matters which may be pending. The State shall make such materials available for inspection at all reasonable times and shall permit duly authorized agents and employees of the Local Agency and FHWA to inspect the project and to inspect, review and audit the project records.

Section 13. Termination Provisions

This agreement may be terminated as follows:

A. Termination for Convenience. The State may terminate this agreement at any time the State determines that the purposes of the distribution of moneys under the agreement would no longer be served by completion of the project. The State shall effect such termination by giving written notice of termination to the Local Agency and specifying the effective date thereof, at least twenty (20) days before the effective date of such termination.

B. Termination for Cause. If, through any cause, the Local Agency shall fail to fulfill, in a timely and proper manner, its obligations under this agreement, or if the Local Agency shall violate any of the covenants, agreements, or stipulations of this agreement, the State shall thereupon have the right to terminate this agreement for cause by giving written notice to the Local Agency of its intent to terminate and at least ten (10) days opportunity to cure the default or show cause why termination is otherwise not appropriate. In the event of termination, all finished or unfinished documents, data, studies, surveys, drawings, maps, models, photographs and reports or other material prepared by the Local Agency under this agreement shall, at the option of the State, become its property, and the Local Agency shall be entitled to receive just and equitable compensation for any services and supplies delivered and accepted.

Notwithstanding the above, the Local Agency shall not be relieved of liability to the State for any damages sustained by the State by virtue of any breach of the agreement by the Local Agency, and the State may withhold payment to the Local Agency for the purposes of mitigating its damages until such time as the exact amount of damages due to the State from the Local Agency is determined.

If after such termination it is determined, for any reason, that the Local Agency was not in default or that the Local Agency's action/inaction was excusable, such termination shall be treated as a termination for convenience, and the rights and obligations of the parties shall be the same as if the agreement had been terminated for convenience, as described herein.

Section 14. Legal Authority

The Local Agency warrants that it possesses the legal authority to enter into this agreement and that it has taken all actions required by its procedures, by-laws, and/or applicable law to exercise that authority, and to lawfully authorize its undersigned signatory to execute this agreement and to bind the Local Agency to its terms. The person(s) executing this agreement on behalf of the Local Agency warrants that such person(s) has full authorization to execute this agreement.

Section 15. Representatives and Notice

The State will provide liaison with the Local Agency through the State's Region Director, Region 4, 11372 Business Park Circle, Firestone, CO 80504. Said Region Director will also be responsible for coordinating the State's activities under this agreement and will also issue a "Notice to Proceed" to the Local Agency for commencement of the work. All communications relating to the day-to-day activities for the work shall be exchanged between representatives of the State's Transportation Region 4 and the Local Agency. All communication, notices, and correspondence shall be addressed to the individuals identified below. Either party may from time to time designate in writing new or substitute representatives.

If to the State:
Abra Geissler
CDOT Region 4
11372 Business Park Circle
Firestone, Colorado 80504
303-995-3008
abra.geissler@state.co.us

If to the Local Agency:
Matt LeCerf
Town of Johnstown
450 South Parish Avenue, PO Box 609
Johnstown, Colorado 80534
970-587-4664
MLeCerf@johnstownco.gov

Section 16. Successors

Except as herein otherwise provided, this agreement shall inure to the benefit of and be binding upon the parties hereto and their respective successors and assigns.

Section 17. Third Party Beneficiaries

It is expressly understood and agreed that the enforcement of the terms and conditions of this agreement and all rights of action relating to such enforcement, shall be strictly reserved to the State and the Local Agency. Nothing contained in this agreement shall give or allow any claim or right of action whatsoever by any other third person. It is the express intention of the State and the Local Agency that any such person or entity, other than the State or the Local Agency receiving services or benefits under this agreement shall be deemed an incidental beneficiary only.

Section 18. Governmental Immunity

Notwithstanding any other provision of this agreement to the contrary, no term or condition of this agreement shall be construed or interpreted as a waiver, express or implied, of any of the immunities, rights, benefits, protection, or other provisions of the Colorado Governmental Immunity Act, § 24-10-101, et seq., C.R.S., as now or hereafter amended. The parties understand and agree that liability for claims for injuries to persons or property arising out of negligence of the State of Colorado, its departments, institutions, agencies, boards, officials and employees is controlled and limited by the provisions of § 24-10-101, et seq., C.R.S., as now or hereafter amended and the risk management statutes, §§ 24-30-1501, et seq., C.R.S., as now or hereafter amended.

Section 19. Severability

To the extent that this agreement may be executed and performance of the obligations of the parties may be accomplished within the intent of the agreement, the terms of this agreement are severable, and should any term or provision hereof be declared invalid or become inoperative for any reason, such invalidity or failure shall not affect the validity of any other term or provision hereof.

Section 20. Waiver

The waiver of any breach of a term, provision, or requirement of this agreement shall not be construed or deemed as a waiver of any subsequent breach of such term, provision, or requirement, or of any other term, provision or requirement.

Section 21. Entire Understanding

This agreement is intended as the complete integration of all understandings between the parties. No prior or contemporaneous addition, deletion, or other amendment hereto shall have any force or effect whatsoever, unless embodied herein by writing. No subsequent novation, renewal, addition, deletion, or other amendment hereto shall have any force or effect unless embodied in a writing executed and approved pursuant to the State Fiscal Rules.

Section 22. Survival of Agreement Terms

Notwithstanding anything herein to the contrary, the parties understand and agree that all terms and conditions of this agreement and the exhibits and attachments hereto which may require continued performance, compliance or effect beyond the termination date of the agreement shall survive such termination date and shall be enforceable by the State as provided herein in the event of such failure to perform or comply by the Local Agency.

Section 23. Modification and Amendment

This agreement is subject to such modifications as may be required by changes in federal or State law, or their implementing regulations. Any such required modification shall automatically be incorporated into and be part of this agreement on the effective date of such change as if fully set forth herein. Except as provided above, no modification of this agreement shall be effective unless agreed to in writing by both parties in an amendment to this agreement that is properly executed and approved in accordance with applicable law.

Section 24. Disputes

Except as otherwise provided in this agreement, any dispute concerning a question of fact arising under this agreement, which is not disposed of by agreement, will be decided by the Chief Engineer of the Department of Transportation. The decision of the Chief Engineer will be final and conclusive unless, within 30 calendar days after the date of receipt of a copy of such written decision, the Local Agency mails or otherwise furnishes to the State a written appeal addressed to the Executive Director of the Department of Transportation. In connection with any appeal proceeding under this clause, the Local Agency shall be afforded an opportunity to be heard and to offer evidence in support of its appeal. Pending final decision of a dispute hereunder, the Local Agency shall proceed diligently with the performance of the agreement in accordance with the Chief Engineer's decision. The decision of the Executive Director or his duly authorized representative for the determination of such appeals will be final and conclusive and serve as final agency action. This dispute clause does not preclude consideration of questions of law in connection with decisions provided for herein. Nothing in this agreement, however, shall be construed as making final the decision of any administrative official, representative, or board on a question of law.

Section 25. Colorado Special Provisions (Colorado Fiscal Rule 3-3)

These Special Provisions apply to all contracts except where noted in italics.

A. Statutory Approval §24-30-202(1), C.R.S.

This Contract shall not be valid until it has been approved by the Colorado State Controller or designee. If this Contract is for a Major Information Technology Project, as defined in §24-37.5-102(2.6), then this Contract shall not be valid until it has been approved by the State's Chief Information Officer or designee.

B. Fund Availability §24-30-202(5.5), C.R.S.

Financial obligations of the State payable after the current State Fiscal Year are contingent upon funds for that purpose being appropriated, budgeted, and otherwise made available.

C. Governmental Immunity

Liability for claims for injuries to persons or property arising from the negligence of the State, its departments, boards, commissions committees, bureaus, offices, employees and officials shall be controlled and limited by the provisions of the Colorado Governmental Immunity Act, §24-10-101, et seq., C.R.S.; the Federal Tort Claims Act, 28 U.S.C. Pt. VI, Ch. 171 and 28 U.S.C. 1346(b), and the State's risk management statutes, §§24-30-1501, et seq. C.R.S. No term or condition of this Contract shall be construed or interpreted as a waiver, express or implied, of any of the immunities, rights, benefits, protections, or other provisions, contained in these statutes.

D. Independent Contractor

Contractor shall perform its duties hereunder as an independent contractor and not as an employee. Neither Contractor nor any agent or employee of Contractor shall be deemed to be an agent or employee of the State. Contractor shall not have authorization, express or implied, to bind the State to any agreement, liability or understanding, except as expressly set forth herein. **Contractor and its employees and agents are not entitled to unemployment insurance or workers compensation benefits through the State and the State shall not pay for or otherwise provide such coverage for Contractor or any of its agents or employees. Contractor shall pay when due all applicable employment taxes and income taxes and local head taxes incurred pursuant to this Contract. Contractor shall (i) provide and keep in force workers' compensation and unemployment compensation insurance in the amounts required by law, (ii) provide proof thereof when requested by the State, and (iii) be solely responsible for its acts and those of its employees and agents.**

E. Compliance with Law

Contractor shall comply with all applicable federal and State laws, rules, and regulations in effect or hereafter established, including, without limitation, laws applicable to discrimination and unfair employment practices.

F. Choice of Law, Jurisdiction, and Venue

Colorado law, and rules and regulations issued pursuant thereto, shall be applied in the interpretation, execution, and enforcement of this Contract. Any provision included or incorporated herein by reference which conflicts with said laws, rules, and regulations shall be null and void. All suits or actions related to this Contract shall be filed and proceedings held in the State of Colorado and exclusive venue shall be in the City and County of Denver.

G. Prohibited Terms

Any term included in this Contract that requires the State to indemnify or hold Contractor harmless; requires the State to agree to binding arbitration; limits Contractor's liability for damages resulting from death, bodily injury, or damage to tangible property; or that conflicts with this provision in any way shall be void ab initio. Nothing in this Contract shall be construed as a waiver of any provision of §24-106-109 C.R.S. Any term included in this Contract that limits Contractor's liability that is not void under this section shall apply only in excess of any insurance to be maintained under this Contract, and no insurance policy shall be interpreted as being subject to any limitations of liability of this Contract.

H. Software Piracy Prohibition

State or other public funds payable under this Contract shall not be used for the acquisition, operation, or maintenance of computer software in violation of federal copyright laws or applicable licensing restrictions. Contractor hereby certifies and warrants that, during the term of this Contract and any extensions, Contractor has and shall maintain in place appropriate systems and controls to prevent such improper use of public funds. If the State determines that Contractor is in violation of this provision, the State may exercise any remedy available at law or in equity or under this Contract, including, without limitation, immediate termination of this Contract and any remedy consistent with federal copyright laws or applicable licensing restrictions.

I. Employee Financial Interest/Conflict of Interest §§24-18-201 and 24-50-507, C.R.S.

The signatories aver that to their knowledge, no employee of the State has any personal or beneficial interest whatsoever in the service or property described in this Contract. Contractor has no interest and shall not acquire any interest, direct or indirect, that would conflict in any manner or degree with the performance of Contractor's services and Contractor shall not employ any person having such known interests.

J. Vendor Offset and Erroneous Payments §§24-30-202(1) and 24-30-202.4, C.R.S.

[*Not applicable to intergovernmental agreements*] Subject to §24-30-202.4(3.5), C.R.S., the State Controller may withhold payment under the State's vendor offset intercept system for debts owed to State agencies for: **(i)** unpaid child support debts or child support arrearages; **(ii)** unpaid balances of tax, accrued interest, or other charges specified in §§39-21-101, *et seq.*, C.R.S.; **(iii)** unpaid loans due to the Student Loan Division of the Department of Higher Education; **(iv)** amounts required to be paid to the Unemployment Compensation Fund; and **(v)** other unpaid debts owing to the State as a result of final agency determination or judicial action. The State may also recover, at the State's discretion, payments made to Contractor in error for any reason, including, but not limited to, overpayments or improper payments, and unexpended or excess funds received by Contractor by deduction from subsequent payments under this Contract, deduction from any payment due under any other contracts, grants or agreements between the State and Contractor, or by any other appropriate method for collecting debts owed to the State.

K. Public Contracts with Natural Persons §§24-76.5-101, *et seq*., C.R.S.

Contractor, if a natural person eighteen (18) years of age or older, hereby swears and affirms under penalty of perjury that Contractor **(i)** is a citizen or otherwise lawfully present in the United States pursuant to federal law, **(ii)** shall comply with the provisions of §§24-76.5-101, *et seq*., C.R.S., and **(iii)** has produced one form of identification required by §24-76.5-103, C.R.S. prior to the Effective Date of this Contract.

THE REMAINDER OF THIS PAGE LEFT INTENTIONALLY BLANK

THE PARTIES HERETO HAVE EXECUTED THIS CONTRACT

* Persons signing for The Local Agency hereby swear and affirm that they are authorized to act on The Local Agency's behalf and acknowledge that the State is relying on their representations to that effect.

THE LOCAL AGENCY TOWN OF JOHNSTOWN	STATE OF COLORADO **Jared S. Polis, GOVERNOR** Colorado Department of Transportation
By: _____ Title: _____ _____ *Signature Date: _____	By: _____ Stephen Harelson, P.E., Chief Engineer (For) Shoshana M. Lew, Executive Director Date: _____
2nd The Local Agency Signature [if Needed] By: _____ Title: _____ _____ *Signature Date: _____	

EXHIBIT A
SCOPE OF WORK

Name of Project: I-25 Segment 6 CP5 - Johnstown Bridge Aesthetics
Project Number: NHPP 0253-275
SubAccount #: 23019

CO 60B Bridge and Interchange Aesthetics

The Town of Johnstown desires to have aesthetic and landscaping features on the two (2) CO 60B Diverging Diamond Interchange (DDI) bridges and associated interchange infield areas. Johnstown has selected the preferred upgrades that require structural and landscaping improvements, and CDOT has identified needed work elements that have been included in Construction Package (CP) 5 that will be built with the I-25 North, Segment 6 Project. The CP 5 Plans and Specifications that are 95% complete are attached as Exhibits B and C. The scope elements shown in these plans and specs may modify slightly as they progress to 100% complete. CDOT has negotiated the CP 5 Construction Agreed upon Price (CAP) with the Segment 6 Construction Manager/General Contractor (CM/GC) joint venture, Ralph L. Wadsworth and SEMA (RLW/SEMA).

All costs associated with CP 5 construction, including construction management, inspection, labor, materials, minor contract revisions, force account items, insurance, and risk register items (known as the Work) will be tracked and quantified by CDOT. In order to complete CP 5 Work, CDOT is currently pursuing a contract with RLW/SEMA for the construction and Rocksol for construction management and inspection. While CDOT will execute and manage these contracts, Johnstown will pay for all CP 5 Work associated with these two contracts. CP 5 will be exempt from paying the construction engineering and indirect costs typically applied to CDOT projects due to Johnstown funding 100% of these improvements. The not to exceed amount for CP 5 Work is $7,628,000.00.

Additionally, CDOT will issue Johnstown a special use permit that will allow Johnstown to maintain improvements and landscaping within the CDOT ROW, which will require traffic control and maintenance protocols approved by CDOT. Once the Project is complete there will be a one-year maintenance period for landscaping items which has been included in the construction contract with RLW/SEMA to ensure vegetation is sufficiently established. Landscaping items not appropriately established after the one-year period will be replaced through the construction contract with RLW/SEMA at no cost to Johnstown. Beyond the landscaping maintenance period and once the contract is complete, no warranty will exist for CP 5 Work per Federal guidelines.

CDOT will not be responsible for paying Johnstown for any item removed in future widening or highway construction projects, including but not limited to landscaping improvements, including irrigation systems, trees, and hardscape improvements.

THE REST OF THIS PAGE INTENTIONALLY LEFT BLANK

PoDI / NHS	
FHWA PROJECT OF DIVISION INTEREST (PoDI)?	☐ NO ■ YES
NATIONAL HIGHWAY SYSTEM?	☐ NO ■ YES

DEPARTMENT OF TRANSPORTATION
STATE OF COLORADO

HIGHWAY CONSTRUCTION BID PLANS OF PROPOSED
FEDERAL AID PROJECT NO. NHPP 0253-275
INTERSTATE HIGHWAY NO. 25
WELD COUNTY
CONSTRUCTION PROJECT CODE NO. 23019
I-25 EXPRESS LANES SEG 5&6 CP5

Related Projects:
P. E. UNDER PROJECT:

Project Number	NHPP 0253-074
Project Code:	23018
Project Number	NHPP 0253-283
Project Code:	24128
Project Number	NHPP 0253-284
Project Code:	24304

R.O.W. Projects:
R.O.W. Project Description
XXXXXXXXXXXXXXX

RFC
OCTOBER 25, 2021

SEE SHEET 2 FOR INDEX

TABULATION OF LENGTH & DESIGN DATA

STATION	ROADWAY FEET	ROADWAY MILES
SH 60A / LCR 14 STA. 14017+07.76 TO STA. 14021+20.91	413.15	0.08
ROADWAY (NET LENGTH)	413.15	0.08
MAJOR STRUCTURE		
PROJECT GROSS LENGTH	**413.15**	**0.08**

DESIGN DATA	SH 60A / LCR 14
DESIGN SPEED	40 MPH
POSTED SPEED	40 MPH EB 55 MPH WB
MAXIMUM GRADE	4.00%
MINIMUM GRADE	0.50%
MINIMUM S.S.D. HORIZONTAL	360'
MINIMUM S.S.D. VERTICAL	385'
CLEAR ZONE (TANGENT)	18'
2018 DESIGN TRAFFIC (ADT)	2,300
2040 DESIGN TRAFFIC (ADT)	4,425

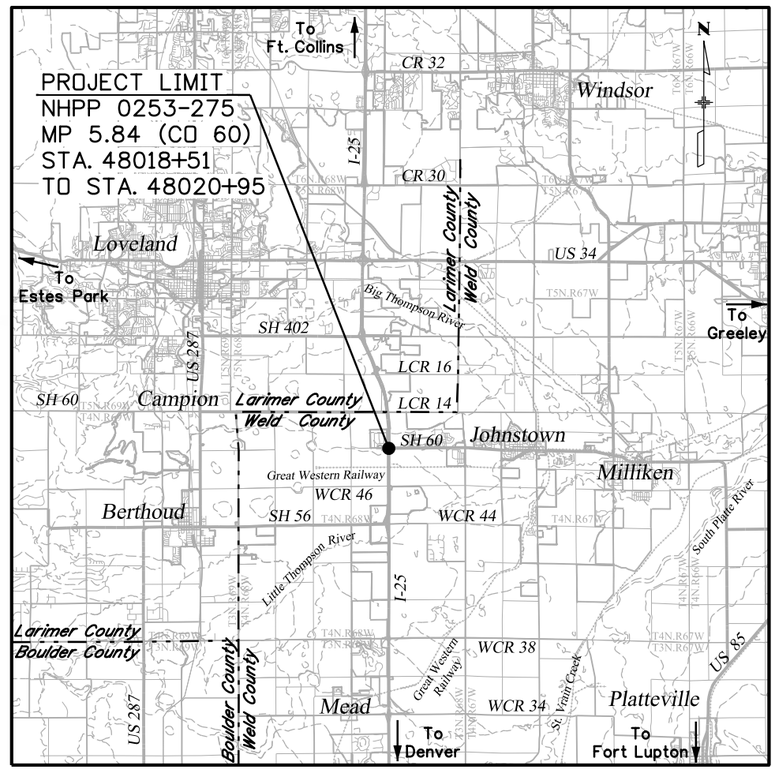

PROJECT LOCATION MAP

0' 2 Mi. 4 Mi. 8 Mi.

Know what's **below**
Call before you dig.

RFC SUBMITTAL - NOT FOR CONSTRUCTION - OCTOBER 25, 2021

Print Date: 10/21/2021	Sheet Revisions	Colorado Department of Transportation	As Constructed
Drawing File Name: 23019DES_TitleSht.dgn	Date: / Comments / Init.	1050 Lee Hill Road, Boulder, CO 80302, Phone: 303-546-5676, FAX: 303-444-0751	No Revisions:
Horiz. Scale: 1:1 Vert. Scale: As Noted		Region 4 ALG	Revised:
Unit Information Unit Leader Initials			Void:
MULLER ENGINEERING COMPANY			

Contract Information	Project No./Code
Contractor:	NHPP 0253-275
Resident Engineer:	23019
Project Engineer:	
PROJECT STARTED: / / ACCEPTED: / /	Sheet Number 1
Comments:	

mullerpw01app02$ 6:34:24 PM \\mullerpw01app02\ICS_pdf_work_dir\13073\6342_16\23019DES_TitleSht.dgn
10/21/2021 iplotdrvm.plt MEC-Standard.tbl

INDEX OF SHEETS

Rev	Date	Sheet No	Sheet Title
			TITLE & INDEX
RFC	10/25/2021	1	TITLE SHEET
RFC	10/25/2021	2	INDEX OF SHEETS
			GENERAL
RFC	10/25/2021	3	STANDARD PLAN LIST
RFC	10/25/2021	4	GENERAL NOTES
			SUMMARY OF APPROXIMATE QUANTITIES
RFC	10/25/2021	5	SUMMARY OF APPROXIMATE QUANTITIES
RFC	10/25/2021	6	SUMMARY OF APPROXIMATE QUANTITIES
			TABULATIONS
RFC	10/25/2021	7	TABULATION OF IRRIGATION SLEEVES
RFC	10/25/2021	8	SURVEY TABULATION SHEET
RFC	10/25/2021	9	PROJECT CONTROL DIAGRAM
RFC	10/25/2021	10	PROJECT CONTROL DIAGRAM
RFC	10/25/2021	11	PROJECT CONTROL DIAGRAM
RFC	10/25/2021	12	PROJECT CONTROL DIAGRAM
			STRUCTURAL PLANS
RFC	10/25/2021	13	GENERAL INFORMATION
RFC	10/25/2021	14	SUMMARY OF QUANTITIES
RFC	10/25/2021	15	GENERAL PLAN
RFC	10/25/2021	16	SOUTHWEST LOWER WALL GENERAL PLAN - ELEVATION
RFC	10/25/2021	17	SOUTHWEST MONUMENT WALL GENERAL PLAN - ELEVATION
RFC	10/25/2021	18	NORTHWEST LOWER WALL GENERAL PLAN - ELEVATION
RFC	10/25/2021	19	NORTHWEST MONUMENT WALL GENERAL PLAN - ELEVATION
RFC	10/25/2021	20	SOUTHEAST LOWER WALL GENERAL PLAN - ELEVATION
RFC	10/25/2021	21	SOUTHEAST MONUMENT WALL GENERAL PLAN - ELEVATION
RFC	10/25/2021	22	NORTHEAST LOWER WALL GENERAL PLAN - ELEVATION
RFC	10/25/2021	23	NORTHEAST MONUMENT WALL GENERAL PLAN - ELEVATION
RFC	10/25/2021	24	ENGINEERING GEOLOGY - SOUTH
RFC	10/25/2021	25	ENGINEERING GEOLOGY - NORTH
RFC	10/25/2021	26	CONSTRUCTION LAYOUT
RFC	10/25/2021	27	FOUNDATION LAYOUT - SOUTH
RFC	10/25/2021	28	FOUNDATION LAYOUT - NORTH
RFC	10/25/2021	29	PILING DETAILS
RFC	10/25/2021	30	SW MONUMENT WALL
RFC	10/25/2021	31	NW MONUMENT WALL
RFC	10/25/2021	32	SE MONUMENT WALL
RFC	10/25/2021	33	NE MONUMENT WALL
RFC	10/25/2021	34	MONUMENT WALL DETAILS
RFC	10/25/2021	35	MONUMENT WALL DETAILS
RFC	10/25/2021	36	LOWER WALL DETAILS
RFC	10/25/2021	37	EXCAVATION AND BACKFILL DETAILS
RFC	10/25/2021	38	BRACKET - TYPE 1
RFC	10/25/2021	39	BRACKET - TYPE 2
RFC	10/25/2021	40	INSTALLATION ON SUPERSTRUCTURE
RFC	10/25/2021	41	INSTALLATION ON LOWER WALLS AND CORNER MONUMENTS

INDEX OF SHEETS (CONTINUED)

Rev	Date	Sheet No	Sheet Title
			FENCING
RFC	10/25/2021	42	FENCE LAYOUT C-17-FX
RFC	10/25/2021	43	FENCE LAYOUT C-17-FXA
RFC	10/25/2021	44	FENCE (SPECIAL)
RFC	10/25/2021	45	FENCE METAL (36 INCH)
RFC	10/25/2021	46	FENCE (SPECIAL) (TYPE A)
			URBAN DESIGN
RFC	10/25/2021	47	URBAN DESIGN ELEMENTS QUANTITIES
RFC	10/25/2021	48	URBAN DESIGN ELEMENTS WEST MEDIAN - SITE PLAN
RFC	10/25/2021	49	URBAN DESIGN ELEMENTS EAST MEDIAN - SITE PLAN
RFC	10/25/2021	50	URBAN DESIGN ELEMENTS TIERED PEDESTAL ENLARGEMENT
RFC	10/25/2021	51	URBAN DESIGN ELEMENTS TIERED PEDESTAL ENLARGEMENT
RFC	10/25/2021	52	URBAN DESIGN ELEMENTS TIERED PEDESTAL ENLARGEMENT
RFC	10/25/2021	53	URBAN DESIGN ELEMENTS WEST MEDIAN - LAYOUT PLAN
RFC	10/25/2021	54	URBAN DESIGN ELEMENTS EAST MEDIAN - LAYOUT PLAN
RFC	10/25/2021	55	URBAN DESIGN ELEMENTS ENHANCED SEEDING PLAN
RFC	10/25/2021	56	URBAN DESIGN ELEMENTS PLANTING PLAN
RFC	10/25/2021	57	URBAN DESIGN ELEMENTS PLANTING NOTES & DETAILS
RFC	10/25/2021	58	URBAN DESIGN ELEMENTS MONUMENT WALL DETAILS
RFC	10/25/2021	59	URBAN DESIGN ELEMENTS MONUMENT WALL DETAILS
RFC	10/25/2021	60	URBAN DESIGN ELEMENTS MONUMENT WALL DETAILS
RFC	10/25/2021	61	URBAN DESIGN ELEMENTS MONUMENT WALL DETAILS
RFC	10/25/2021	62	URBAN DESIGN ELEMENTS URBAN DESIGN DETAILS
RFC	10/25/2021	63	URBAN DESIGN ELEMENTS URBAN DESIGN DETAILS
RFC	10/25/2021	64	URBAN DESIGN ELEMENTS URBAN DESIGN DETAILS
RFC	10/25/2021	65	URBAN DESIGN ELEMENTS URBAN DESIGN DETAILS
RFC	10/25/2021	66	URBAN DESIGN ELEMENTS URBAN DESIGN DETAILS
RFC	10/25/2021	67	URBAN DESIGN ELEMENTS URBAN DESIGN DETAILS
			IRRIGATION PLANS
RFC	10/25/2021	68	URBAN DESIGN ELEMENTS IRRIGATION COVER SHEET
RFC	10/25/2021	69	URBAN DESIGN ELEMENTS IRRIGATION LEGEND & FLAG NOTES
RFC	10/25/2021	70	URBAN DESIGN ELEMENTS IRRIGATION QUANTITY LIST
RFC	10/25/2021	71	URBAN DESIGN ELEMENTS IRRIGATION PLAN
RFC	10/25/2021	72	URBAN DESIGN ELEMENTS IRRIGATION PLAN
RFC	10/25/2021	73	URBAN DESIGN ELEMENTS IRRIGATION PLAN
RFC	10/25/2021	74	URBAN DESIGN ELEMENTS IRRIGATION PLAN
RFC	10/25/2021	75	URBAN DESIGN ELEMENTS IRRIGATION PLAN
RFC	10/25/2021	76	URBAN DESIGN ELEMENTS IRRIGATION DETAILS
RFC	10/25/2021	77	URBAN DESIGN ELEMENTS IRRIGATION DETAILS
RFC	10/25/2021	78	URBAN DESIGN ELEMENTS IRRIGATION DETAILS
RFC	10/25/2021	79	URBAN DESIGN ELEMENTS IRRIGATION DETAILS

			LIGHTING PLANS
RFC	10/25/2021	80	LIGHTING & ELECTRICAL COVER SH60
RFC	10/25/2021	81	I-25 LIGHTING & ELECTRICAL PLAN SH60
RFC	10/25/2021	82	I-25 LIGHTING & ELECTRICAL PLAN SH60
RFC	10/25/2021	83	I-25 LIGHTING & ELECTRICAL PLAN SH60
RFC	10/25/2021	84	I-25 LIGHTING & ELECTRICAL PLAN TYPICAL MONUMENT
RFC	10/25/2021	85	LIGHTING & ELECTRICAL DETAILS TYPICAL MONUMENT
RFC	10/25/2021	86	LIGHTING & ELECTRICAL DETAILS SH60

RFC SUBMITTAL - NOT FOR CONSTRUCTION - OCTOBER 25, 2021

mullerpw01app02$ 6:57:46 PM \\mullerpw01app02\ICS_pdf_work_dir\13089\6342_29\23019DES_Title_Index01.dgn
10/25/2021 iplotdrvm.plt MEC-Standard.tbl

Print Date: 10/25/2021
Drawing File Name: 23019DES_Title_Index01.dgn
Horiz. Scale: 1:1 Vert. Scale: As Noted
Unit Information Unit Leader Initials

MULLER ENGINEERING COMPANY

Sheet Revisions		
Date:	Comments	Init.

Colorado Department of Transportation
1050 Lee Hill Road
Boulder, CO 80302
Phone: 303-546-5676
FAX: 303-444-0751
Region 4 ALG

As Constructed
No Revisions:
Revised:
Void:

I-25 EXPR. LANES SEG 5&6 CP5
INDEX OF SHEETS

Designer: EKS
Detailer: LMR
Sheet Subset: INDEX
Structure Numbers
Subset Sheets: 1 of 1

Project No./Code
NHPP 0253-275
23019
Sheet Number 2

PLAN NUMBER	M STANDARD TITLE	PAGE NUMBER
■ M-100-1	STANDARD SYMBOLS (3 SHEETS)	1-3
■ M-100-2	ACRONYMS AND ABBREVIATIONS (4 SHEETS)	4-7
□ M-203-1	APPROACH ROADS	8
□ M-203-2	DITCH TYPES	9
□ M-203-11	SUPERELEVATION CROWNED AND DIVIDED HIGHWAYS (3 SHEETS)	10-12
□ M-203-12	SUPERELEVATION STREETS (2 SHEETS)	13-14
■ M-206-1	EXCAVATION AND BACKFILL FOR STRUCTURES (2 SHEETS)	15-16
□ M-206-2	EXCAVATION AND BACKFILL FOR BRIDGES (2 SHEETS)	17-18
■ M-208-1	TEMPORARY EROSION CONTROL (11 SHEETS)	19-29
□ M-210-1	MAILBOX SUPPORTS (2 SHEETS)	30-31
■ M-214-1	NURSERY STOCK DETAILS	32
□ M-216-1	SOIL RETENTION COVERING (2 SHEETS)	33-34
□ M-412-1	CONCRETE PAVEMENT JOINTS (5 SHEETS)	35-39
□ M-412-2	CONCRETE PAVEMENT CRACK REPAIR (4 SHEETS) *(NEW, ISSUED ON OCTOBER 7, 2019)*	
□ M-510-1	STRUCTURAL PLATE PIPE H-20 LOADING	40
□ M-601-1	SINGLE CONCRETE BOX CULVERT (CAST-IN-PLACE) (2 SHEETS)	41-42
□ M-601-2	DOUBLE CONCRETE BOX CULVERT (CAST-IN-PLACE) (2 SHEETS)	43-44
□ M-601-3	TRIPLE CONCRETE BOX CULVERT (CAST-IN-PLACE) (2 SHEETS)	45-46
□ M-601-10	HEADWALL FOR PIPES	47
□ M-601-11	TYPE "S" SADDLE HEADWALLS FOR PIPE	48
□ M-601-12	HEADWALLS AND PIPE OUTLET PAVING	49
□ M-601-20	WINGWALLS FOR PIPE OR BOX CULVERTS (2 SHEETS)	50-51
□ M-603-1	METAL PIPE (4 SHEETS)	52-55
□ M-603-2	REINFORCED CONCRETE PIPE	56
□ M-603-3	PRECAST CONCRETE BOX CULVERT *(REVISED ON SEPTEMBER 10, 2020)*	57
□ M-603-4	CORRUGATED POLYETHYLENE PIPE (AASHTO M294) AND POLYPROPYLENE PIPE (AASHTO M330)	58
□ M-603-5	POLYVINYL CHLORIDE (PVC) PIPE (AASHTO M304)	59
□ M-603-6	STEEL REINFORCED POLYETHYLENE RIBBED PIPE (AASHTO MP 20)	60
□ M-603-10	CONCRETE AND METAL END SECTIONS	61
□ M-603-12	TRAVERSABLE END SECTIONS AND SAFETY GRATES (3 SHEETS)	62-64
□ M-604-10	INLET, TYPE C	65
□ M-604-11	INLET, TYPE D	66
□ M-604-12	CURB INLET TYPE R (2 SHEETS)	67-68
□ M-604-13	CONCRETE INLET TYPE 13	69
□ M-604-20	MANHOLES (3 SHEETS)	70-72
□ M-604-25	VANE GRATE INLET (5 SHEETS)	73-77
□ M-605-1	SUBSURFACE DRAINS	78

PLAN NUMBER	M STANDARD TITLE	PAGE NUMBER
□ M-606-1	MIDWEST GUARDRAIL SYSTEM TYPE 3 W-BEAM 31 INCHES (19 SHEETS) *(REVISED ON MARCH 5, 2020)*	79-97
□ M-606-13	GUARDRAIL TYPE 7 F-SHAPE BARRIER (4 SHEETS)	98-101
□ M-606-14	PRECAST TYPE 7 CONCRETE BARRIER (4 SHEETS) *(REVISED ON AUGUST 21, 2020)*	~~102-104~~
□ M-606-15	GUARDRAIL TYPE 9 SINGLE SLOPE BARRIER (11 SHEETS) *(REVISED ON MARCH 5, 2020)*	105-115
□ M-607-1	WIRE FENCES AND GATES (3 SHEETS)	116-118
□ M-607-2	CHAIN LINK FENCE (3 SHEETS)	119-121
□ M-607-3	BARRIER FENCE	122
□ M-607-4	DEER FENCE, GATES, AND GAME RAMPS (7 SHEETS) *(REVISED ON JULY 13, 2020)*	~~123-127~~
□ M-607-10	PICKET SNOW FENCE	128
□ M-607-15	ROAD CLOSURE GATE (9 SHEETS)	129-137
□ M-608-1	CURB RAMPS (10 SHEETS)	138-147
□ M-609-1	CURBS, GUTTERS, AND SIDEWALKS (4 SHEETS)	148-151
□ M-611-1	CATTLE GUARD (2 SHEETS)	152-153
□ M-611-2	DEER GUARD (2 SHEETS)	154-155
□ M-614-1	RUMBLE STRIPS (3 SHEETS)	156-158
□ M-614-2	SAND BARREL ARRAYS (2 SHEETS)	159-160
□ M-615-1	EMBANKMENT PROTECTOR TYPE 3	161
□ M-615-2	EMBANKMENT PROTECTOR TYPE 5	162
□ M-616-1	INVERTED SIPHON	163
□ M-620-1	FIELD LABORATORY CLASS 1	164
□ M-620-2	FIELD LABORATORY CLASS 2 (2 SHEETS)	165-166
□ M-620-11	FIELD OFFICE CLASS 1	167
□ M-620-12	FIELD OFFICE CLASS 2	168
□ M-629-1	SURVEY MONUMENTS (2 SHEETS)	169-170

COLORADO
DEPARTMENT OF TRANSPORTATION

M&S STANDARDS PLANS LIST

July 31, 2019

Revised on February 16, 2021

ALL OF THE M&S STANDARD PLANS, AS SUPPLEMENTED AND REVISED, APPLY TO THIS PROJECT WHEN USED BY DESIGNATED PAY ITEM OR SUBSIDIARY ITEM.

THE M&S STANDARD PLANS USED TO DESIGN THIS PROJECT ARE INDICATED BY A MARKED BOX ■, AND WILL BE ATTACHED TO THE PLANS. ALL THE OTHER M&S STANDARD PLANS ARE STILL ELIGIBLE FOR CONSTRUCTION IF APPROVED BY AN APPROPRIATE CDOT ENGINEER.

PLAN NUMBER	S STANDARD TITLE	PAGE NUMBER
□ S-612-1	DELINEATOR INSTALLATIONS (8 SHEETS)	171-178
□ S-613-1	ROADWAY LIGHTING (6 SHEETS) *(REVISED ON SEPTEMBER 30, 2020)*	~~179-186~~
□ S-613-2	ALTERNATIVE ROADWAY LIGHTING (4 SHEETS) *(NEW, ISSUED ON SEPTEMBER 30, 2020)*	
□ S-614-1	GROUND SIGN PLACEMENT (2 SHEETS)	187-188
□ S-614-2	CLASS I SIGNS	189
□ S-614-3	CLASS II SIGNS	190
□ S-614-4	CLASS III SIGNS (3 SHEETS)	191-193
□ S-614-5	BREAK-AWAY SIGN SUPPORT DETAILS FOR CLASS III SIGNS (2 SHEETS)	194-195
□ S-614-6	CONCRETE FOOTINGS AND SIGN ISLANDS FOR CLASS III SIGNS (2 SHEETS)	196-197
□ S-614-8	TUBULAR STEEL SIGN SUPPORT DETAILS (7 SHEETS) *(REVISED ON DECEMBER 31, 2020)*	198-204
~~S-614-9~~	~~PEDESTRIAN PUSH BUTTON POST ASSEMBLY (2 SHEETS)~~ *(SUPERSEDED ON JANUARY 23, 2020 BY S-614-45)*	~~205-206~~
□ S-614-10	MARKER ASSEMBLY INSTALLATIONS	207
□ S-614-11	MILEPOST SIGN DETAIL FOR HIGH SNOW AREAS	208
□ S-614-12	STRUCTURE NUMBER INSTALLATION (2 SHEETS)	209-210
□ S-614-14	FLASHING BEACON AND SIGN INSTALLATIONS (4 SHEETS)	211-214
□ S-614-20	TYPICAL POLE MOUNT SIGN INSTALLATIONS	215
□ S-614-21	CONCRETE BARRIER SIGN POST INSTALLATIONS (2 SHEETS) *(REVISED ON SEPTEMBER 21, 2020)*	216-217
□ S-614-22	TYPICAL MULTI-SIGN INSTALLATIONS	218
□ S-614-40	TYPICAL TRAFFIC SIGNAL 30'-75' DOUBLE MAST ARMS 65'-75' SINGLE MAST ARMS (5 SHEETS)	219-223
□ S-614-40A	ALTERNATIVE TRAFFIC SIGNAL 25'-55' SINGLE MAST ARMS (4 SHEETS)	224-227
□ S-614-41	TEMPORARY SPAN WIRE SIGNALS (13 SHEETS)	228-240
□ S-614-42	CABINET FOUNDATION DETAIL (4 SHEETS)	241-244
□ S-614-43	TRAFFIC LOOP AND MISCELLANEOUS SIGNAL DETAILS (8 SHEETS)	245-252
□ S-614-44	PEDESTAL POLE SIGNALS (2 SHEETS)	253-254
□ S-614-45	PEDESTRIAN PUSH BUTTON POST ASSEMBLY DETAILS (6 SHEETS) *(REVISED ON DECEMBER 3, 2020)*	
□ S-614-50	STATIC SIGN MONOTUBE STRUCTURES (12 SHEETS)	255-266
□ S-614-60	DYNAMIC SIGN MONOTUBE STRUCTURES (14 SHEETS)	267-280
□ S-627-1	PAVEMENT MARKINGS (9 SHEETS) *(REVISED ON FEBRUARY 16, 2021)*	281-289
□ S-630-1	TRAFFIC CONTROLS FOR HIGHWAY CONSTRUCTION (24 SHEETS)	290-313
□ S-630-2	BARRICADES, DRUMS, CONCRETE BARRIERS (TEMP) AND VERTICAL PANELS	314
□ S-630-3	FLASHING BEACON (PORTABLE) DETAILS	315
□ S-630-4	STEEL SIGN SUPPORT (TEMPORARY) INSTALLATION DETAILS (2 SHEETS)	316-317
□ S-630-5	PORTABLE RUMBLE STRIPS (TEMPORARY) (2 SHEETS)	318-319
□ S-630-6	EMERGENCY PULL-OFF AREA (TEMPORARY)	320
□ S-630-7	ROLLING ROADBLOCKS FOR TRAFFIC CONTROL (3 SHEETS)	321-323

RFC SUBMITTAL - NOT FOR CONSTRUCTION - OCTOBER 25, 2021

GENERAL NOTES:

Section 100

1. THE COLORADO DEPARTMENT OF TRANSPORTATION STANDARD SPECIFICATIONS FOR ROAD AND BRIDGE CONSTRUCTION DATED 2019, ALONG WITH PROJECT SPECIAL PROVISIONS AND STANDARD SPECIAL PROVISIONS, CONTROL CONSTRUCTION OF THIS PROJECT.

2. THE CONTRACTOR SHALL NOTIFY THE OWNER AND ENGINEER OF ANY PROBLEM IN CONFORMING TO THE APPROVED PLANS FOR ANY ELEMENT OF THE PROPOSED IMPROVEMENTS PRIOR TO ITS CONSTRUCTION.

3. THE CONTRACTOR SHALL BE RESPONSIBLE TO ADHERING TO ALL LOCAL ORDINANCES.

4. TABULATIONS OF QUANTITIES ARE PROVIDED FOR INFORMATION ONLY. DUE TO THE NATURE OF CMGC, THE SUMMARY OF APPROXIMATE QUANTITIES WILL BE UPDATED TO SHOW AGREED UPON QUANTITIES AFTER THE QUANTITY RECONCILIATION MEETING.

5. CDOT MAINTENANCE SHALL BE ALLOWED ACCESS THROUGHOUT THE PROJECT AT ALL TIMES. ACCESS THROUGH SECTIONS UNDER CONSTRUCTION SHALL BE COORDINATED WITH THE ENGINEER.

Section 200

1. THE CONTRACTOR SHALL ADHERE TO ALL SB40, 404, AND ROD REEVALUATION REQUIREMENTS.

2. WATER SHALL BE USED AS A DUST PALLIATIVE WHERE REQUIRED. THE CONTRACTOR SHALL PROVIDE A WATER TRUCK ON-SITE FOR DUST CONTROL. LOCATIONS SHALL BE AS DIRECTED BY THE ENGINEER. WATER SHALL NOT BE PAID FOR SEPARATELY.

3. EXCAVATION REQUIRED FOR COMPACTION OF BASES OF CUTS AND FILLS WILL BE CONSIDERED AS SUBSIDIARY TO THAT OPERATION AND WILL NOT BE PAID FOR SEPARATELY.

4. DEPTH OF MOISTURE-DENSITY CONTROL FOR THIS PROJECT SHALL BE AS FOLLOWS:
   - FULL DEPTH OF ALL EMBANKMENTS
   - FULL DEPTH FOR AGGREGATE BASE COURSE
   - 6 INCHES FOR BASES OF CUTS AND FILLS

5. THE CONTRACTOR SHALL KEEP THE WORK AREA DRY OF STANDING WATER AND SHALL KEEP THE EXCAVATION AREAS FREE FROM STORM RUN-OFF.

6. THE CONTRACTOR SHALL BE RESPONSIBLE FOR THE ACCEPTANCE AND CONTROL OF ALL SURFACE AND SUBSURFACE DRAINAGE AND GROUNDWATER ENTERING THE PROJECT AREA.

7. THE CONTRACTOR SHALL LIMIT CONSTRUCTION ACTIVITIES TO THOSE AREAS WITHIN THE LIMITS OF DISTURBANCE AS SHOWN ON THE CP2-3 PLANS. ANY DISTURBANCE BEYOND THESE LIMITS SHALL BE RESTORED TO ORIGINAL CONDITION BY THE CONTRACTOR AT THE CONTRACTOR'S EXPENSE. CONSTRUCTION ACTIVITIES IN ADDITION TO NORMAL CONSTRUCTION PROCEDURE SHALL INCLUDE THE PARKING OF VEHICLES OR EQUIPMENT, DISPOSAL OF LITTER, AND ANY OTHER ACTION WHICH WOULD ALTER EXISTING CONDITIONS.

8. ANY DAMAGE TO PRESENT HIGHWAY FACILITIES SHALL BE REPAIRED IMMEDIATELY AND PRIOR TO CONTINUING OTHER WORK. ANY MUD OR OTHER MATERIAL TRACKED OR OTHERWISE DEPOSITED ON THE ROADWAY AND SIDEWALK SHALL BE REMOVED DAILY OR AS ORDERED BY THE ENGINEER.

9. PRIVATE DRIVEWAYS AND PARKING LOTS SHALL NOT BE USED AS TURNAROUNDS UNLESS WRITTEN PERMISSION IS OBTAINED FROM THE APPROPRIATE PROPERTY OWNER.

Section 300

1. DURING CONSTRUCTION THE CONTRACTOR SHALL MAINTAIN ALL ACCESSES USING AGGREGATE BASE COURSE MATERIAL OR OTHER MATERIAL APPROVED BY THE ENGINEER. THIS SHALL NOT BE MEASURED AND PAID FOR SEPARATELY BUT SHALL BE INCLUDED IN THE WORK.

Section 600

1. SULFATE EXPOSURE FOR ALL CONCRETE ON THIS PROJECT IS CLASS 2, INCLUDING BUT NOT LIMITED TO PCCP, PIPES, ETC.

2. THE CONTRACTOR SHALL REPAIR OR REPLACE AT THEIR EXPENSE ANY EXISTING SIGN DESIGNATED TO REMAIN THAT IS DAMAGED DURING CONSTRUCTION ACTIVITIES. ALL EXISTING SIGNS NOT DESIGNATED FOR REMOVAL OR REPLACEMENT ON THE PLANS ARE DESIGNATED TO STAY.

3. ALL EXISTING SURVEY MONUMENTATION DESIGNATED TO REMAIN SHALL BE PROTECTED FROM DAMAGE BY THE CONTRACTOR DURING CONSTRUCTION OPERATIONS. ANY MONUMENTS DISTURBED BY THE CONTRACTOR THAT ARE NOT DESIGNATED FOR RELOCATION, SHALL BE RESET AT THE CONTRACTOR'S EXPENSE. THE CONTRACTOR AND ENGINEER SHALL NOTE THOSE MONUMENTS IN THE FIELD PRIOR TO CONSTRUCTION.

4. THE CONTRACTOR SHALL NOT PARK EQUIPMENT OVERNIGHT WITHIN THE CLEAR ZONE LIMITS WITHOUT APPROVED TRAFFIC CONTROL DEVICES IN PLACE.

5. IN ACCORDANCE WITH SECTION 630.10 OF THE STANDARD SPECIFICATIONS, THE PROJECT IS CLASSIFIED AS A SIGNIFICANT PROJECT.

RFC SUBMITTAL - NOT FOR CONSTRUCTION - OCTOBER 25, 2021

mullerpw01app02$ 6:38:58 PM \\mullerpw01app02\ICS_pdf_work_dir\13073\6342_17\23019DES_GeneralNotes01.dgn
10/21/2021 iplotdrvm.plt MEC-Standard.tbl

Print Date: 10/21/2021	Sheet Revisions	Colorado Department of Transportation	As Constructed
Drawing File Name: 23019DES_GeneralNotes01.dgn	Date: / Comments / Init.	1050 Lee Hill Road, Boulder, CO 80302, Phone: 303-546-5676, FAX: 303-444-0751	No Revisions:
Horiz. Scale: 1:1 Vert. Scale: As Noted		Region 4 ALG	Revised:
Unit Information Unit Leader Initials			Void:
MULLER ENGINEERING COMPANY			

I-25 EXPR. LANES SEG 5&6 CP5 GENERAL NOTES			Project No./Code
			NHPP 0253-275
Designer: BWS	Structure Numbers		23019
Detailer: LMR			Sheet Number 4
Sheet Subset: NOTES	Subset Sheets: 1 of 1		

INDEX BOOK	INDEX PAGE	INDEX SHEET	CONTRACT ITEM NO.	CONTRACT ITEM	UNIT	BRIDGES PLAN	BRIDGES AS CONST.	LANDSCAPE ARCHITECTURE PLAN	LANDSCAPE ARCHITECTURE AS CONST.	PLAN	AS CONST.	PLAN	AS CONST.	PLAN	AS CONST.	PLAN	AS CONST.	PROJECT TOTALS TOTAL	PROJECT TOTALS AS CONST.
			206-00000	STRUCTURE EXCAVATION	CY	126		6										132	
			206-00100	STRUCTURE BACKFILL (CLASS 1)	CY	868												868	
			206-00200	STRUCTURE BACKFILL (CLASS 2)	CY	2,374												2,374	
			206-01803	SHORING (AREA 23)	L S	1												1	
			206-01804	SHORING (AREA 24)	L S	1												1	
			206-01805	SHORING (AREA 25)	L S	1												1	
			206-01806	SHORING (AREA 26)	L S	1												1	
			212-00706	SEEDING (NATIVE) DRILL (TYPE 1)	ACRE			1.06										1.06	
			212-00706	SEEDING (NATIVE) DRILL (TYPE 2)	ACRE			0.42										0.42	
			213-00300	CONCRETE LANDSCAPE BORDER	LF			3,902										3,902	
			214-00220	DECIDUOUS TREE (2 INCH CALIPER)	EACH			8										8	
			304-06007	AGGREGATE BASE COURSE (CLASS 6)	CY			3										3	
			502-00460	PILE TIP	EACH	64												64	
			502-00500	COMPLETE JOINT PENETRATION (CJP) SPLICE	EACH	8												8	
			502-02010	DYNAMIC PILE TEST	EACH	4												4	
			502-11489	STEEL PILING (HP 14X89)	LF	2,370												2,370	
			519-02000	CORNER MONUMENTS	EACH	4												4	
			601-01000	CONCRETE CLASS B	CY			52										52	
			601-03000	CONCRETE CLASS D	CY	347.5												348	
			601-40400	STRUCTURAL CONCRETE STAIN	SY	415												415	
			602-00000	REINFORCING STEEL	LB	60,560		3,585										64,145	
			605-83000	GEOCOMPOSITE DRAIN	SY	32												32	
			607-11530	FENCE (SPECIAL)	LF	277												277	
			607-11530	FENCE (SPECIAL) (TYPE A)	LF			81										81	
			607-11937	FENCE METAL (36 INCH)	LF	724												724	
			609-71000	CURB (SPECIAL)	LF			1,600										1,600	
			610-00030	MEDIAN COVER MATERIAL (CONCRETE)	SF			11,308										11,308	
			613-00306	3 INCH ELECTRICAL CONDUIT (BORED)	LF			900										900	
			613-01100	1 INCH ELECTRICAL CONDUIT (PLASTIC)	LF			720										720	
			613-01200	2 INCH ELECTRICAL CONDUIT (PLASTIC)	LF			2,300										2,300	

Print Date: 10/21/2021
Drawing File Name: 23019DES_SAQ01.dgn
Horiz. Scale: 1:1 Vert. Scale: As Noted
Unit Information Unit Leader Initials

MULLER ENGINEERING COMPANY

Sheet Revisions

Date:	Comments	Init.

Colorado Department of Transportation
1050 Lee Hill Road
Boulder, CO 80302
Phone: 303-546-5676
FAX: 303-444-0751
Region 4 ALG

As Constructed
No Revisions:
Revised:
Void:

I-25 EXPR. LANES SEG 5&6 CP5
SUMMARY OF
APPROXIMATE QUANTITIES

Designer: BWS
Detailer: LMR
Sheet Subset: SAQ
Structure Numbers
Subset Sheets: 1 of 2

Project No./Code
NHPP 0253-275
23019
Sheet Number 5

mullerpw01app02$ 8:34:05 PM \\mullerpw01app02\ICS_pdf_work_dir\13074\6342_14\23019DES_SAQ01.dgn
10/21/2021 iplotdrvr.plt MEC-Standard.tbl

RFC SUBMITTAL - NOT FOR CONSTRUCTION - OCTOBER 25, 2021

INDEX BOOK	INDEX PAGE	INDEX SHEET	CONTRACT ITEM NO.	CONTRACT ITEM	UNIT	BRIDGES PLAN	BRIDGES AS CONST.	LANDSCAPE ARCHITECTURE PLAN	LANDSCAPE ARCHITECTURE AS CONST.	PLAN	AS CONST.	PLAN	AS CONST.	PLAN	AS CONST.	PLAN	AS CONST.	PROJECT TOTALS TOTAL	PROJECT TOTALS AS CONST.
			613-07002	TYPE TWO PULL BOX	EACH			10										10	
			613-10000	WIRING	L S			1										1	
			613-13000	LUMINAIRE (LED) (SPECIAL)	EACH			8										8	
			613-13005	LUMINAIRE (SPECIAL)(LED)(STEP)(LIGHT)	EACH			58										58	
			613-15000	FLOODLIGHT	EACH			24										24	
			613-15050	SPOT LIGHT	EACH			4										4	
			613-40000	CONCRETE FOUNDATION PAD	EACH			2										2	
			613-40010	LIGHT STANDARD FOUNDATION	EACH			32										32	
			613-50109	METER POWER PEDESTAL	EACH			2										2	
			613-50132	2-PLEX RECEPTACLE (WITH BOX AND COVER)	EACH			12										12	
			613-80010	BALLAST UNIT	EACH			2										2	
			622-00155	PLANTER BOX (SPECIAL) (TYPE 1)	EACH			5										5	
			622-00155	PLANTER BOX (SPECIAL) (TYPE 2)	EACH			5										5	
			622-00155	PLANTER BOX (SPECIAL) (TYPE 3)	EACH			10										10	
			622-00155	PLANTER BOX (SPECIAL) (TYPE 4)	EACH			4										4	
			622-00155	PLANTER BOX (SPECIAL) (TYPE 5)	EACH			2										2	
			623-00603	3 INCH PLASTIC PIPE (IRRIGATION/SLEEVE)	LF			1,224										1,224	
			623-00604	4 INCH PLASTIC PIPE (IRRIGATION/SLEEVE)	LF			250										250	
			623-09900	SPRINKLER SYSTEM	L S			1										1	
			700-70082	F/A FURNISH & INSTALL ELECTRICAL SERVICE	F A			1										1	

RFC SUBMITTAL - NOT FOR CONSTRUCTION - OCTOBER 25, 2021

muller pw01app02$ 7:22:13 PM \\mullerpw01app02\ICS_pdf_work_dir\13090\6342_15\23019DES_SAQ02.dgn
10/25/2021 iplotdrvr.plt MEC-Standard.tbl

Print Date: 10/25/2021
Drawing File Name: 23019DES_SAQ02.dgn
Horiz. Scale: 1:1 Vert. Scale: As Noted
Unit Information Unit Leader Initials

MULLER ENGINEERING COMPANY

Sheet Revisions		
Date:	Comments	Init.

Colorado Department of Transportation
1050 Lee Hill Road
Boulder, CO 80302
Phone: 303-546-5676
FAX: 303-444-0751
Region 4 ALG

As Constructed
No Revisions:
Revised:
Void:

I-25 EXPR. LANES SEG 5&6 CP5
SUMMARY OF
APPROXIMATE QUANTITIES

Designer: BWS
Detailer: LMR
Sheet Subset: SAQ
Structure Numbers
Subset Sheets: 2 of 2

Project No./Code
NHPP 0253-275
23019
Sheet Number 6

TABULATION OF IRRIGATION SLEEVES (FOR INFORMATION ONLY)

ID	BEGIN STA	BEGIN OFFSET	END STA	END OFFSET	623-00603 3 INCH PLASTIC PIPE (IRRIGATION/SLEEVE	623-00604 4 INCH PLASTIC PIPE (IRRIGATION/SLEEVE	COMMENTS
					LF	LF	
		SH 60					
1	44018+22.51	13.4' RT	48014+21.01	73.4' RT	120		TWO 60 LF 3" SLEEVES
2	48014+23.03	10.8' LT	44014+23.59	69.8' LT	59	59	
3	48013+55.52	114.1' RT	48016+90.15	96.2' RT	78		TWO 9 LF 3" SLEEVES
4	48016+79.59	182.1' RT	48017+49.35	176.3' RT	140		TWO 70 LF 3" SLEEVES
5	48017+00.66	112.0' LT	48017+28.60	83.3' LT	80		TWO 40 LF 3" SLEEVES
6	48017+25.45	187.8' LT	48017+76.01	181.0' LT	102		TWO 51 LF 3" SLEEVES
7	48022+02.37	180.6' LT	48022+53.32	182.8' LT	102		TWO 51 LF 3" SLEEVES
8	48022+02.76	174.9' RT	48022+57.63	178.5' RT	110		TWO 55 LF 3" SLEEVES
9	48022+43.21	88.3' RT	48022+83.67	116.0' RT	98		TWO 49 LF 3" SLEEVES
10	48023+13.52	39.9' LT	48024+13.63	.6' RT	108	108	
11	48025+88.04	61.7' RT	48025+89.53	16.7' RT	45	45	
12	48025+90.44	11.0' LT	48025+92.79	82.9' LT	144		TWO 72 LF 3" SLEEVES
13	48030+24.46	56.9' RT	48030+62.43	55.6' RT	38	38	
PROJECT TOTALS					1224	250	

NOTES:
1. IRRIGATION SLEEVES SHALL BE CONSTRUCTED WITH CP2-3 AND PAID FOR IN CP5

RFC SUBMITTAL - NOT FOR CONSTRUCTION - OCTOBER 25, 2021

mullerpw01app02$ 6:34:30 PM \\mullerpw01app02\iCS_pdf_work_dir\13073\6342_28\23019DES_Tab_Irrigation Sleeves.dgn
10/21/2021 iplotdrvr.plt MEC-Standard.tbl

Print Date: 10/21/2021
Drawing File Name: 23019DES_Tab_Irrigation Sleeves.dgn
Horiz. Scale: 1:1 Vert. Scale: As Noted
Unit Information Unit Leader Initials
MULLER ENGINEERING COMPANY

Sheet Revisions

Date:	Comments	Init.

Colorado Department of Transportation
1050 Lee Hill Road
Boulder, CO 80302
Phone: 303-546-5676
FAX: 303-444-0751
Region 4 ALG

As Constructed
No Revisions:
Revised:
Void:

I-25 EXPR. LANES SEG 5&6 CP5
TABULATION OF
IRRIGATION SLEEVES

Designer: EKS
Detailer: LMR
Structure Numbers
Sheet Subset: TAB IR SL
Subset Sheets: 1 of 1

Project No./Code
NHPP 0253-275
23019
Sheet Number 7

TO ESTABLISH GEOMETRIC CONTROL FOR THE CONSTRUCTION OF THIS PROJECT, THE DEPARTMENT HAS PROVIDED THE FOLLOWING INFORMATION:

	Format *	Available From The Engineer/Not Included
■ 3D Design Modeling Electronic Files		In The Contract/For Information Only
☐ Horizontal Control		
☐ Vertical Control		
☐ Roadway Alignment		
☐ Original Terrain Data		
■ Other:	Horizontal & Vertical Control in CP2-3 & CP4	

* Specify the information format, ie., plan sheet, computer disk, computer printout, or other. The information marked is either contained on the plans or is available from the Engineer.

TYPE OF PROJECT

- ■ Landscaping
- ☐ Signalization
- ☐ Safety Improvement
- ☐ Asphalt Overlay
- ☐ Concrete Overlay
- ☐ Minor Widening
- ☐ Major Reconstruction
- ☐ New Roadway Construction
- ☐ Bridge Replacement
- ☐ Bridge Widening
- ☐ New Bridge
- ■ Other: Architectural Monuments

SURVEY WORK TO BE PERFORMED BY OTHERS: _____

WORK PERFORMED BY THE CONTRACTOR'S SURVEYOR UNDER SECTION 625:

- ___ ■ A complete passing Base Line report (completed within 6 months prior to the start of the project)
- ___ ■ An instrument calibration Certification (completed within 6 months prior to the start of the project)
- ___ ■ Establish and Maintain Project Centerline or Engineer Approved Offset Line(s)
- ___ ■ Verification and Maintenance of Horizontal and Vertical Control
- ___ ■ Verify or Determine existing grades and alignments
- ___ ■ Verify or Determine existing topography
- ___ ☐ Clearing and Grubbing Limits (Section 201)
- ___ ☐ Removal Limits (Section 202)
- ___ ☐ Reset Items (Section 210)
- ___ ☐ Excavation and Embankment (Section 203)
  - ___ ☐ Excavation
    - ___ ☐ Unclassified
    - ___ ☐ Stripping
    - ___ ☐ Muck
    - ___ ☐ Rock
    - ___ ☐ Borrow
    - ___ ☐ Other: _____
    - ___ ☐ Potholing
  - ___ ☐ Embankment
  - ___ ☐ Site Grading
  - ___ ☐ Erosion Control (Perm)
  - ___ ☐ Other: _____
  - ___ ☐ As Staked Earthwork Quantities (See General Notes)

	Slope Staking (Y/N)	Grid (Y/N)	Grade (Y/N)	Special Interval
Excavation	–	–	–	–
	–	–	–	–
	–	–	–	–
	–	–	–	–
	–	–	–	–
	–	–	–	–
	–	–	–	–

Embankment	–	–	–	–
	–	–	–	–
	–	–	–	–
	–	–	–	–

- ___ ■ Landscaping
  - ___ ☐ Top Soil (Section 207)
  - ___ ■ Seeding (Section 212)
  - ___ ☐ Mulching (Section 213)
  - ___ ■ Planting (Section 214)
  - ___ ☐ Herbicide (Section 217)
  - ___ ☐ Other: _____
- ___ ☐ Erosion Control (Section 208)
  - ___ ☐ Seeding (Temp)
  - ___ ☐ Silt Fence
  - ___ ☐ Erosion Bales
  - ___ ☐ Erosion Logs
  - ___ ☐ Riprap (Temp)
  - ___ ☐ Other: _____
- ___ ☐ Roadway Bases
  - ___ ☐ Untreated Subgrade
  - ___ ☐ Treated Subgrade
  - ___ ☐ Aggregate Base Course (Section 304)
  - ___ ☐ Reconditioning
  - ___ ☐ PMBB – Plant Mix Bituminous Base
  - ___ ☐ Other: _____

	Grid (Y/N)	Grade (Y/N)	Special Interval	Special Offset
Roadway Bases	–	–	–	–
	–	–	–	–
	–	–	–	–
	–	–	–	–
	–	–	–	–
	–	–	–	–

- ___ ☐ Pavements
  - ___ ☐ HMA – Hot Mix Asphalt (Section 403)
  - ___ ☐ Concrete (Section 412)
  - ___ ☐ Heating & Scarifying Treatment
  - ___ ☐ Prime Coat, Tack Coat & Rejuvenating Agent (Section 407)
  - ___ ☐ Seal Coat or Chip Seal (Section 409)
  - ___ ☐ Other: _____

	Grid (Y/N)	Special Interval	Special Offset
Pavements	–	–	–
	–	–	–
	–	–	–
	–	–	–
	–	–	–
	–	–	–

- ___ ☐ Roadway Elements
  - ___ ☐ Curb and Gutter (Section 609)
  - ___ ☐ Drop inlets – alignment and grades (Section 604)
  - ___ ☐ Retaining Walls
  - ___ ☐ Guard Rail (Section 606)
  - ___ ☐ Sidewalk (Section 608)
  - ___ ☐ Overlay Stationing
  - ___ ☐ Other: _____

	Tangent Interval	Curve Interval	Special Offset
Curb & Gutter	–	–	–

	Left Interval	Center Interval	Right Interval
Stationing	–	–	–

- ___ ☐ Riprap (Perm) (Section 506)
- ___ ☐ Slope and Ditch Paving (Section 507)
- ___ ☐ Minor Structures
  - ___ ☐ Structure Excavation limits (Section 206)
  - ___ ☐ Culverts (Section 603)
  - ___ ☐ Culverts w/ Headwalls and Wingwalls (Section 601)
  - ___ ☐ Concrete Box Culverts w/ Headwalls and Wingwalls
  - ___ ☐ Pipes (Section 603)
    - ___ ☐ Sanitary Sewer
    - ___ ☐ Storm Sewer
    - ___ ☐ Water
    - ___ ☐ Irrigation
    - ___ ☐ Miscellaneous
  - ___ ☐ Manholes (Section 604)
  - ___ ☐ Inlets (Section 604)
  - ___ ☐ Permanent Water Quality BMP (Section 208)
  - ___ ☐ Other: _____
- ___ ■ Major Structures – Overhead Signs (Section 614), Concrete Box Culverts, Bridges – and all other structures assigned a structure number
  - ___ ■ Structure Excavation limits (Section 206)
  - ___ ☐ Concrete Box Culverts (Section 603) w/ Headwalls and Wingwalls (Section 601)
  - ___ ■ Piling locations and cut off elevations (Section 502)
  - ___ ☐ Caisson locations and elevations (Section 503)
  - ___ ■ Footing locations, alignment, and elevations
  - ___ ☐ Abutment/Pier locations, alignment, and elevations
  - ___ ☐ Wingwall skew angles/offsets
  - ___ ■ Structural concrete form locations
  - ___ ■ Substructure As-constructed survey required for Bridges (Subsection 601 .12) and Overhead signs (S-614-50)
  - ___ ☐ Bridge expansion joint(s) alignment and grade (longitudinal and transverse)
  - ___ ☐ Deck grades at Girder 10th or "n" th point locations and elevations
  - ___ ☐ Slope and Ditch Paving (Section 507)
  - ___ ☐ Other: _____
- ___ ■ Fencing (Section 607)
  - ___ ☐ Temporary
  - ___ ■ Permanent
  - ___ ☐ Sound Barrier
  - ___ ☐ Other: _____
- ___ ☐ Delineators (Section 612)
  - ___ ☐ Temporary
  - ___ ☐ Permanent
- ___ ■ Lighting (Section 613) and Traffic Control Devices (Permanent) (Section 614)
  - ___ ☐ Signal pole locations and elevations
  - ___ ■ Light pole locations and elevations
  - ___ ☐ Sign locations
  - ___ ☐ Field verify sign post locations, elevations, and lengths before fabrication.
  - ___ ☐ Other: _____
- ___ ☐ Pavement Marking (Section 627)
  - ___ ☐ Striping (Temp)
  - ___ ☐ Striping (Perm)
  - ___ ☐ Symbols
  - ___ ☐ Other: _____
- ___ ☐ Temporary Lighting and Construction Traffic Control Devices (Section 630)
  - ___ ☐ Signal pole locations and elevations (Temp)
  - ___ ☐ Light pole locations and elevations (Temp)
  - ___ ☐ Sign Locations (Temp)
  - ___ ☐ Other: _____
- ___ ☐ All Easements (Temp Staking by P.L.S. Only)
- ___ ☐ Right of Way (Temp Staking by P.L.S. Only)

WORK PERFORMED BY THE CONTRACTOR'S SURVEYOR UNDER SECTION 629:

- ___ ☐ Monumentation (Section 629)
  - ___ ☐ Control
  - ___ ☐ Right of Way
  - ___ ☐ Land corners, Aliquot corners
  - ___ ☐ Easements
  - ___ ☐ Reference the specified existing monuments: ** _____
  - ___ ☐ Replace the specified existing monuments: ** _____
  - ___ ☐ Locate monuments. It is estimated ___ hours are required.

NOTE: All 629 items shall include adequate research, calculations, and evaluations of evidence for monuments to be set.

** A Tabulation of Survey Monuments may be provided on the plans.

GENERAL NOTES:

1. Unless indicated otherwise on this Survey Tabulation Sheet, all survey work and staking intervals shall be done in accordance with the latest edition of the CDOT Survey Manual.
2. Adequate information for establishing lines, grades, and locations for all work items have been specified on the plans. Any additional information required to stake the item or element shall be generated by the Contractor's surveyor.
3. The Contractor's surveyor shall provide an estimate of the man-hours necessary to complete the work items indicated on this sheet. A copy of this sheet, with the estimated man-hours written on the blank line to the left of the specified items, shall be submitted with the Survey Schedule to the Engineer 3 days prior to the Presurvey Conference - Construction Survey.
4. Stakes and Monuments which are damaged or destroyed by the progress of construction shall be replaced by the Contractor at no additional cost to the Department.
5. The Contractor shall furnish an As Staked (or 3D Design Modeling Electronic Files) Earthwork Quantity report to the Engineer prior to completion of twenty percent (20%) of the planned earthwork in any phase as per the CDOT Survey Manual. A printed copy of the As Staked (or 3D Design Modeling Electronic Files) Earthwork data report and a computer disk with that information on it, in the specified format shall be submitted to the Engineer. The Contractor shall field verify original ground cross sections at a maximum 500 feet intervals.
6. Prior to beginning work on any subsequent operation, such as placing base course or paving, the Contractor shall certify in writing to the Engineer that the final grade is within specified tolerance.
7. The Contractor's surveyor shall perform all field surveying and calculations necessary to tie plan grades into field grades.
8. The Contractor shall coordinate construction staking on the project with any utility work.
9. Fieldbooks shall contain daily records of points set and or measurements observed. The information recorded shall contain: date, crew members' names, point no., description, staking information, and sketches. If the survey information is collected electronically, information recorded shall be provided to the Project Engineer in a hard copy format that is intuitive, clear and related to the supplemental information recorded in the field books. All linear surveys, such as slope stakes and blue tops, shall have the station and offset information related to the measured information. Non-linear surveys such as structures staking shall have sketches relating electronic information, such as point numbers, to the sketch.
10. The Contractor's surveyor shall submit the following fieldbooks to the Engineer:
    - ■ Horizontal Control (Primary & Secondary)
    - ■ Vertical Control (i.e. Benchmarks)
    - ☐ Property Pin Ties
    - ■ Horizontal Alignment
    - ■ Grading
    - ☐ Slope Staking
    - ☐ Minor Structures
    - ■ Major Structures
    - ■ One fieldbook for each work category shown on this sheet
    - ☐ Other Fieldbook(s): _____
11. The Contractor's surveyor shall submit the following (prior to surveying on the project) to the Engineer:
    - ■ All required Instrument Calibrations

Print Date: 10/21/2021	
Drawing File Name: 23019_DES_SurveyTabSheet.dgn	
Horiz. Scale: 1:1	Vert. Scale: As Noted
Unit Information	Unit Leader Initials

Sheet Revisions		
Date:	Comments	Init.

Colorado Department of Transportation
1050 Lee Hill Road
Boulder, CO 80302
Phone: 303-546-5676
FAX: 303-444-0751
Region 4 ALG

As Constructed
No Revisions:
Revised:
Void:

I-25 EXPR. LANES SEG 5&6 CP5
SURVEY TABULATION SHEET

Designer:	JLS	Structure Numbers	
Detailer:	AD2		
Sheet Subset:	SURVEY	Subset Sheets:	1 of 1

Project No./Code
NHPP 0253-275
23019
Sheet Number 8

RFC SUBMITTAL - NOT FOR CONSTRUCTION - OCTOBER 25, 2021

mullerpw01app02$ 6:38:59 PM \\mullerpw01app02\ICS_pdf_work_dir\13073\6342_27\23019_DES_SurveyTabSheet.dgn
10/21/2021 iplotdrvm.plt MEC-Standard.tbl

Colorado Department of Transportation
10601 W. 10th Street
Greeley, CO 80634
Phone: 970-350-2161
Region 4 MDG

Sheet Revisions			Sheet Revisions			Sheet Revisions		
Date	Description	Initials	Date	Description	Initials	Date	Description	Initials

Project Control Diagram				
Title Sheet				
Project Number: NHPP 0253-270				
Project Location: I-25 Express Lanes SH7 to SH1				
Segments 5 and 6: SH 66 to SH 402				
Project Code:	Last Mod. Date	Subset	Sheet No.	
22831	12-06-18	3.01 of 3.04	3.01	9

DEPARTMENT OF TRANSPORTATION STATE OF COLORADO

PROJECT CONTROL DIAGRAM

Interstate 25 MP 243 to 255
Section 1,3,10,11,14,15,22,23,26,27
Township 3 North, Range 68 West
Section 2,3,10,11,14,15,22,23,26,27,34,35
Township 4 North, Range 68 West
of the 6th Principal Meridian
County of Weld
Section 22,27,34,35
Township 5 North, Range 68 West
of the 6th Principal Meridian
County of Larimer

SHEET NO. / INDEX OF SHEETS

SHEET NO.	INDEX OF SHEETS
3.01-3.01	(1) Title Sheet
3.02-3.02	(1) Coordinate Tables
3.03-3.04	(2) Plan Sheet
	(4) Total Sheets

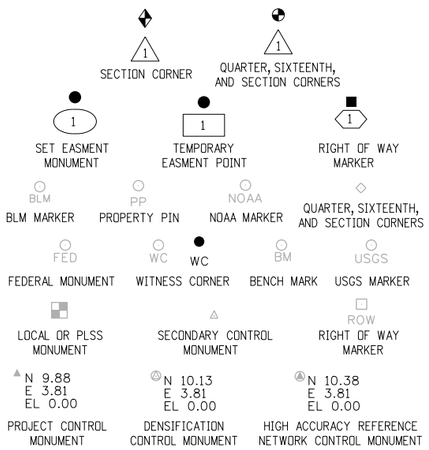

Note: For a complete listing of symbololgy used within this set of plans, please refer to the M-100-1 Standard Symbols of the Colorado Department of Transportation M&S Standards Publication dated July 2012. Existing features are shown as screened weight (gray scale). Proposed or new features are shown as full weight without screening.

Typical Control Monument Cap
Not to Scale

▲ CM-MP - Control Point Monuments set by CDOT. They are CDOT Type 2 monuments, a 3¼" dia. aluminum control monument cap (as shown) on a 3' x ¾" dia. aluminum security rod on a 3' x ¾" dia. smooth aluminum rod.

General Notes:

1. This Project Control Diagram is not a boundary survey of the adjoining property and is prepared for the Colorado Department of Transportation purposes only.
2. This plan set is subject to change and may not be the most current set. It is the user's responsibility to verify with CDOT that this set is the most current. The information contained on the attached drawing is not valid unless this copy bears an original signature of the Professional Land Surveyor hereon named.
3. Refer to the M-629-1 Survey Monuments of the Standard Plans dated July, 2012 found in The Colorado Department of Transportation, M & S Standards for typical survey monument descriptions.

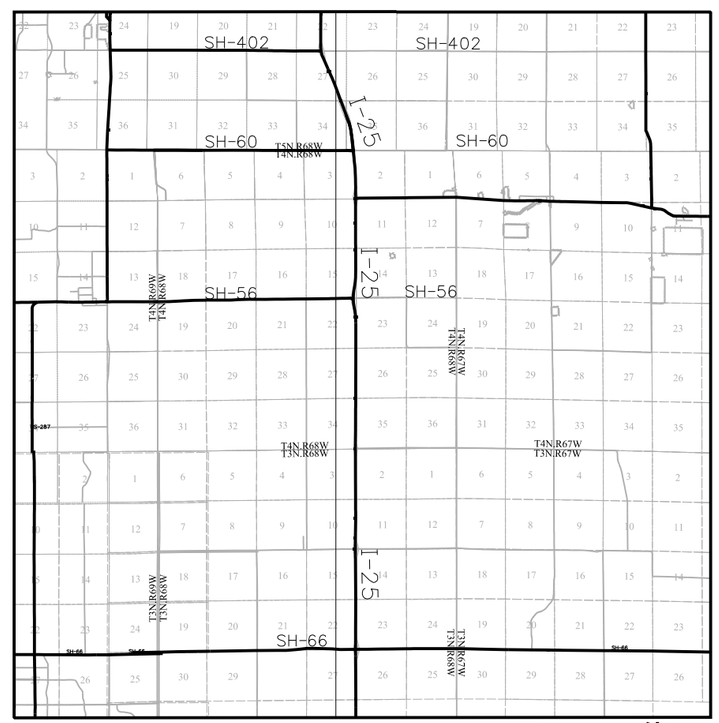

PROJECT LOCATION MAP

0' X' XX' XXX'

NTS

Basis of Bearings: Bearings used in the calculations of coordinates are based on a grid bearing of N 00° 06' 53" E from the Control Monument "CM 4774" (NGS Stainless Deep Rod stamped "RAMES 1992", MP 247.74), Section 35, Township 4 North, Range 68 West, Sixth P.M. and the Control Monument "CM 4823" (CDOT Type 5 Monument, MP 248.23), Section 26, Township 4 North, Range 6W West, Sixth P.M. as obtained from a Global Positioning System (GPS) survey based on the National Spatial Reference System (NSRS).

Basis of Elevations: Project elevations are GPS derived, using GEOID 09, based on a NAVD 88 elevation of 1515.457m on NGS Benchmark "Y 401" (Stamped "Y 401 1984" NGS brass cap set in a rock outcrop).

COORDINATE DATUM: Project coordinates are modified Colorado State Plane North Zone NAD 83(2007) coordinates. The project seed point (CM 5735, MP 257.35) coordinates are: Northing = 424149.583m, Easting = 957507.683, and Elevation = 1485.000m. The ground scale factor used to modify the coordinates is 1.0002719487. Project Coordinates are truncated by 350,000m in the Northing and 900,000m in the Easting.

To get from Project to State Plane coordinates: convert project coordinates to metric, add the truncation, subtract the seed point northing and easting, divide by the ground scale factor, then add the seed point northing and easting.

NOTICE: According to Colorado law you must commence any legal action based upon any defect in this survey within three years after you first discover such defect. In no event may any action based upon any defect in this survey be commenced more than ten years from the date of the certification shown hereon.

SURVEYOR STATEMENT (PROJECT CONTROL DIAGRAM)

I, Mark Guerrero, a professional land surveyor licensed in the State of Colorado, do hereby state to the Colorado Department of Transportation this Project Control Diagram was prepared and the field survey it represents was performed under my responsible charge and, based upon my knowledge, information and belief is in accordance with applicable standards of practice defined by Colorado Department of Transportation publications. This statement is not a guaranty or warranty, either expressed or implied.

PLS No. 29752

RFC SUBMITTAL - NOT FOR CONSTRUCTION - OCTOBER 25, 2021

9/20/2019 angelim 8:12:41 AM C:\Users\angelim\Documents\ACAD\22831 I-25 SH66 to SH402 Segment 5 and 6\Control Diagram\22831SURV_PCD-Title.dgn

Colorado Department of Transportation
10601 W. 10th Street
Greeley, CO 80634
Phone: 970-350-2161
Region 4 MDG

Sheet Revisions		
Date	Description	Initials

Sheet Revisions		
Date	Description	Initials

Sheet Revisions		
Date	Description	Initials

Project Control Diagram
Coordinate Tables

Project Number: NHPP 0253-270
Project Location: I-25 Express Lanes SH7 to SH1
Segments 5 and 6: SH 66 to SH 402

Project Code:	Last Mod. Date	Subset	Sheet No.	
22831	09-06-18	3.02 of 3.04	3.02	10

CHARN GEODETIC COORDINATE TABLE

(adjusted field data) (meters)

NAME	COORDINATES NAD 83(2007)		ELLIPS.	MAPPING	SCALE	NAD 83(2007) ZONE 0501		DESCRIPTION
	LATITUDE	LONGITUDE	HEIGHT	ANGLE		NORTHING	EASTING	
FORD	40°11'22.03383"	104°58'45.82206"	1491.356	0°20'11"	0.999957415	399986.067	958733.049	NGS Deep Rod "FORD 1994"
RAMES	40°16'12.66687"	104°58'46.71642"	1547.678	0°20'10"	0.999956904	408949.741	958659.293	NGS Deep Rod "RAMES 1992"
JOHNSON	40°21'33.11529"	104°58'57.64339"	1507.069	0°20'03"	0.999958633	418831.757	958343.479	NGS Deep Rod "JOHNSON 1992"

GEODETIC COORDINATE TABLE

(adjusted field data) (meters)

NAME	COORDINATES NAD 83(2007)		ELLIPS.	MAPPING	SCALE	NAD 83(2007) ZONE 0501		DESCRIPTION
	LATITUDE	LONGITUDE	HEIGHT	ANGLE		NORTHING	EASTING	
4322	40°12'15.96798"	104°58'19.80862"	1502.911	0°20'28"	0.999957171	401653.149	959338.454	CDOT Type 5 Mon. (MP 243.22)
4323	40°12'15.93778"	104°59'14.26089"	1501.488	0°19'53"	0.999957171	401644.662	958050.760	CDOT Type 5 Mon. (MP 243.23)
4387	40°12'51.46057"	104°58'45.31110"	1502.738	0°20'11"	0.999957047	402744.253	958728.937	CDOT Type 5 Mon. (MP 243.87)
4444	40°13'20.97549"	104°58'46.30056"	1493.545	0°20'11"	0.999956967	403654.423	958700.199	CDOT Type 5 Mon. (MP 244.44)
4494	40°13'47.09024"	104°58'47.30027"	1494.112	0°20'10"	0.999956913	404459.723	958671.839	CDOT Type 5 Mon. (MP 244.94)
4521	40°13'59.74453"	104°59'29.67349"	1503.997	0°19'43"	0.999956892	404844.202	957667.923	CDOT Type 5 Mon. (MP 245.21)
4522	40°14'00.21294"	104°58'03.65590"	1481.310	0°20'38"	0.999956892	404870.581	959701.135	CDOT Type 5 Mon. (MP 245.22)
4541	40°14'10.83401"	104°58'46.74033"	1484.805	0°20'10"	0.999956877	405192.114	958680.778	CDOT Type 5 Mon. (MP 245.41)
4580	40°14'32.62182"	104°58'46.02100"	1495.585	0°20'11"	0.999956857	405864.202	958693.836	Type 6 Mon. (MP 245.80)
4631	40°14'59.44671"	104°58'47.61626"	1512.899	0°20'10"	0.999956846	406691.325	958651.279	CDOT Type 5 Mon. (MP 246.31)
4667	40°15'17.14815"	104°58'47.80452"	1519.239	0°20'10"	0.999956849	407237.254	958643.628	CDOT Type 5 Mon. (MP 246.67)
4720	40°15'45.85797"	104°58'45.90502"	1531.546	0°20'11"	0.999956868	408122.999	958683.316	CDOT Type II Mon. (MP 247.20)
4721	40°15'46.12265"	104°59'13.05968"	1533.830	0°19'53"	0.999956868	408127.423	958041.661	CDOT Type 5 Mon. (MP 247.21)
4722	40°15'46.43640"	104°58'13.19594"	1521.404	0°20'32"	0.999956869	408145.416	959456.057	CDOT Type 5 Mon. (MP 247.22)
4774	40°16'12.66687"	104°58'46.71642"	1547.678	0°20'10"	0.999956904	408949.741	958659.293	NGS Deep Rod "RAMES 1992" (MP 247.74)
4823	40°16'38.31750"	104°58'46.45288"	1526.974	0°20'11"	0.999956953	409740.908	958660.875	CDOT Type 5 Mon. (MP 248.23)
4870	40°17'02.74019"	104°58'47.27425"	1512.977	0°20'10"	0.999957015	410494.054	958637.054	CDOT Type 5 Mon. (MP 248.70)
4925	40°17'31.74835"	104°58'46.57200"	1487.733	0°20'10"	0.999957107	411388.839	958648.390	CDOT Type 5 Mon. (MP 249.25)
4973	40°17'56.87965"	104°58'46.33301"	1467.267	0°20'11"	0.999957202	412163.989	958649.485	CDOT Type 5 Mon. (MP 249.73)
5023	40°18'22.37969"	104°58'48.49232"	1473.008	0°20'09"	0.999957314	412950.181	958593.882	CDOT Type 5 Mon. (MP 250.23)
5024	40°18'23.75525"	104°58'03.53863"	1462.079	0°20'38"	0.999957320	412998.904	959655.109	CDOT Type 5 Mon. (MP 250.24)
5025	40°18'22.63161"	104°59'21.48689"	1474.805	0°19'48"	0.999957315	412953.423	957814.742	CDOT Type 5 Mon. (MP 250.25)
5048	40°18'35.45893"	104°58'46.67621"	1479.623	0°20'10"	0.999957377	413353.832	958634.398	CDOT Type 5 Mon. (MP 250.48)
5103	40°19'03.98325"	104°58'47.45695"	1486.509	0°20'10"	0.999957529	414233.493	958610.803	CDOT Type 5 Mon. (MP 251.03)
5147	40°19'26.67086"	104°58'47.45911"	1497.258	0°20'10"	0.999957663	414933.243	958606.647	CDOT Type 5 Mon. (MP 251.47)
5202	40°19'55.08700"	104°58'47.61974"	1513.844	0°20'10"	0.999957848	415809.656	958597.714	CDOT Type 5 Mon. (MP 252.02)
5226	40°20'07.82488"	104°58'26.42640"	1507.773	0°20'24"	0.999957937	416205.480	959095.628	CDOT Type II Mon. stamped MP 6.20 (MP 252.26)
5227	40°20'07.98901"	104°59'07.94618"	1526.044	0°19'57"	0.999957939	416204.793	958115.623	CDOT Type II Mon. stamped MP 5.00 (MP 252.27)
5256	40°20'22.48883"	104°58'47.61657"	1511.560	0°20'10"	0.999958045	416654.809	958592.832	CDOT Type 5 Mon. (MP 252.56)
5303	40°20'46.66673"	104°58'49.36783"	1514.938	0°20'09"	0.999958233	417400.285	958547.130	CDOT Type 5 Mon. (MP 253.03)
5346	40°21'08.76686"	104°58'52.40426"	1514.907	0°20'07"	0.999958417	418081.500	958471.486	CDOT Type II Mon. (MP 253.46)
5393	40°21'33.11529"	104°58'57.64339"	1507.069	0°20'03"	0.999958633	418831.757	958343.479	NGS Deep Rod "JOHNSON 1992" (MP 253.93)
5452	40°22'02.06510"	104°59'12.45872"	1497.738	0°19'54"	0.999958907	419722.628	957988.753	CDOT Type 5 Mon. (MP 254.52)
5509	40°22'28.47758"	104°59'27.36817"	1492.059	0°19'44"	0.999959175	420535.245	957632.338	CDOT ROW Mon. (MP 255.09)
5537	40°22'40.57178"	104°59'41.91549"	1494.237	0°19'35"	0.999959303	420906.307	957287.056	CDOT Type II Mon. stamped MP 4.13 (MP 255.37)
5538	40°22'41.35957"	104°59'22.37428"	1490.786	0°19'47"	0.999959312	420933.244	957747.852	CDOT Type II Mon. stamped MP 4.42 (MP 255.38)
5585	40°23'05.82793"	104°59'35.15732"	1477.962	0°19'39"	0.999959582	421686.198	957442.014	CDOT Type 5 Mon. (MP 255.85)

PROJECT COORDINATE SUMMARY TABLE (feet)

NAME	PROJECT COORDINATES		ELEV.	DESCRIPTION
	NORTHING	EASTING	(NAVD 88)	
4322	169445.301	194681.210	4988.120	CDOT Type 5 Mon. (MP 243.22)
4323	169417.451	190455.355	4983.208	CDOT Type 5 Mon. (MP 243.23)
4387	173026.006	192680.945	4987.374	CDOT Type 5 Mon. (MP 243.87)
4444	176012.933	192586.632	4957.156	CDOT Type 5 Mon. (MP 244.44)
4494	178655.708	192493.562	4958.961	CDOT Type 5 Mon. (MP 244.94)
4521	179917.460	189198.986	4991.168	CDOT Type 5 Mon. (MP 245.21)
4522	180004.028	195871.432	4917.144	CDOT Type 5 Mon. (MP 245.22)
4541	181059.214	192522.899	4928.390	CDOT Type 5 Mon. (MP 245.41)
4580	183264.821	192565.752	4963.723	Type 6 Mon. (MP 245.80)
4631	185979.211	192426.093	5020.479	CDOT Type 5 Mon. (MP 246.31)
4667	187770.802	192400.984	5041.249	CDOT Type 5 Mon. (MP 246.67)
4720	190677.575	192531.229	5081.588	CDOT Typell Mon. (MP 247.20)
4721	190692.093	190425.491	5088.948	CDOT Type 5 Mon. (MP 247.21)
4722	190751.141	195067.153	5048.474	CDOT Type 5 Mon. (MP 247.22)
4774	193390.713	192452.390	5134.470	NGS Deep Rod "RAMES 1992" (MP 247.74)
4823	195987.108	192457.584	5066.505	CDOT Type 5 Mon. (MP 248.23)
4870	198458.724	192379.407	5020.542	CDOT Type 5 Mon. (MP 248.70)
4925	201395.164	192416.612	4937.684	CDOT Type 5 Mon. (MP 249.25)
4973	203938.994	192420.205	4870.503	CDOT Type 5 Mon. (MP 249.73)
5023	206519.058	192237.729	4889.286	CDOT Type 5 Mon. (MP 250.23)
5024	206678.957	195720.387	4853.656	CDOT Type 5 Mon. (MP 250.24)
5025	206529.700	189680.808	4895.010	CDOT Type 5 Mon. (MP 250.25)
5048	207843.731	192370.692	4910.976	CDOT Type 5 Mon. (MP 250.48)
5103	210730.538	192293.259	4933.513	CDOT Type 5 Mon. (MP 251.03)
5147	213026.925	192279.622	4968.736	CDOT Type 5 Mon. (MP 251.47)
5202	215903.072	192250.307	5023.101	CDOT Type 5 Mon. (MP 252.02)
5226	217202.058	193884.324	5003.268	CDOT Type II Mon. stamped MP 6.20 (MP 252.26)
5227	217199.803	190668.217	5062.994	CDOT Type II Mon. stamped MP 5.00 (MP 252.27)
5256	218676.632	192234.285	5015.556	CDOT Type 5 Mon. (MP 252.56)
5303	221123.080	192084.305	5026.587	CDOT Type 5 Mon. (MP 253.03)
5346	223358.640	191836.061	5026.426	CDOT Type II Mon. (MP 253.46)
5393	225820.779	191415.976	5000.635	NGS Deep Rod "JOHNSON 1992" (MP 253.93)
5452	228744.373	190251.862	4969.885	CDOT Type 5 Mon. (MP 254.52)
5509	231411.159	189082.207	4951.120	CDOT ROW Mon. (MP 255.09)
5537	232628.881	187949.087	4958.158	CDOT Type II Mon. stamped MP 4.13 (MP 255.37)
5538	232717.282	189461.292	4946.939	CDOT Type II Mon. stamped MP 4.42 (MP 255.38)
5585	235188.269	188457.616	4904.746	CDOT Type 5 Mon. (MP 255.85)

9/20/2019 angellm 2:06:05 PM C:\Users\angellm\Documents\ACAD\22831 I-25 SH66 to SH402 Segment 5 and 6\Control Diagram\22831SURV_PCD-Coord.dgn

RFC SUBMITTAL - NOT FOR CONSTRUCTION - OCTOBER 25, 2021

Item #8.

Colorado Department of Transportation

10601 W. 10th Street
Greeley, CO 80634
Phone: 970-350-2161

Region 4 MDG

Sheet Revisions		
Date	Description	Initials

Sheet Revisions		
Date	Description	Initials

Sheet Revisions		
Date	Description	Initials

Project Control Diagram
Plan Sheet

Project Number: NHPP 0253-270

Project Location: I-25 Express Lanes SH7 to SH1

Segments 5 and 6: SH 66 to SH 402

Project Code:	Last Mod. Date	Subset	Sheet No.	
22831	09-06-18	3.03 of 3.04	3.03	11

RFC SUBMITTAL - NOT FOR CONSTRUCTION - OCTOBER 25, 2021

7/3/2019 ongelim 4:17:13 PM C:\Users\ongelim\Documents\ACAD\22831 I-25 SH66 to SH402 Segment 5 and 6\Control Diagram\22831SURV_PCD-Plan01.dgn

Item #8.

Colorado Department of Transportation

10601 W. 10th Street
Greeley, CO 80634
Phone: 970-350-2161

Region 4 MDG

Sheet Revisions			Sheet Revisions			Sheet Revisions		
Date	Description	Initials	Date	Description	Initials	Date	Description	Initials

Project Control Diagram
Plan Sheet

Project Number: NHPP 0253-270

Project Location: I-25 Express Lanes SH7 to SH1

Segments 5 and 6: SH 66 to SH 402

Project Code:	Last Mod. Date	Subset	Sheet No.	
22831	12-06-18	3.04 of 3.04	3.04	12

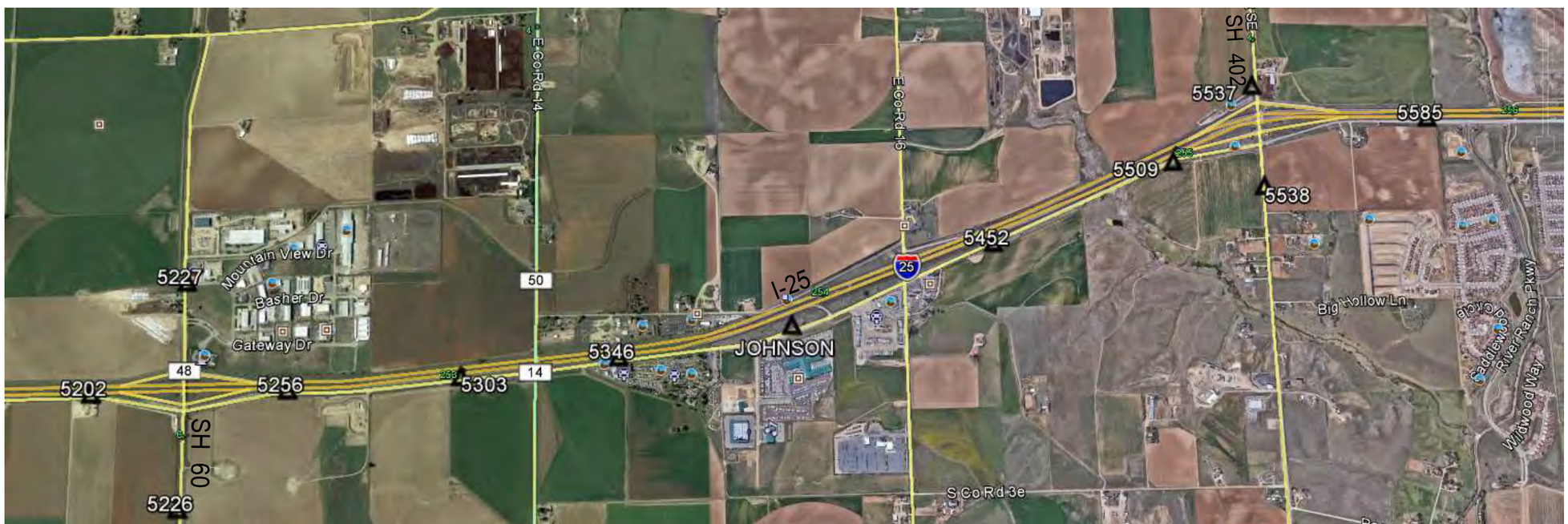

RFC SUBMITTAL - NOT FOR CONSTRUCTION - OCTOBER 25, 2021

8/29/2019 angelim 8:58:26 AM C:\Users\angelim\Documents\ACAD\22831 I-25 SH66 to SH402 Segment 5 and 6\Control Diagram\22831SURV_PCD-Plan02.dgn

GENERAL NOTES:

1. ALL WORK SHALL BE DONE IN ACCORDANCE WITH THE COLORADO DEPARTMENT OF TRANSPORTATION (CDOT) 2019 STANDARD SPECIFICATIONS FOR ROAD AND BRIDGE CONSTRUCTION, AS APPLICABLE TO THE PROJECT.
2. EXCEPT AS SHOWN IN THE PLANS, STRUCTURE EXCAVATION AND BACKFILL SHALL BE IN ACCORDANCE WITH CDOT M&S STANDARD M-206-2.
3. EXPANSION JOINT MATERIAL SHALL MEET AASHTO SPECIFICATION M213.
4. CONCRETE SURFACES RECEIVING A STRUCTURAL CONCRETE STAIN ARE INDICATED ON SHEETS WF22, WF23, AND WF24.
5. ALL STRUCTURAL CONCRETE FOR THESE BRIDGE PLANS SHALL CONFORM TO CEMENTITIOUS MATERIALS REQUIREMENTS CLASS 2, CORRESPONDING TO SULFATE EXPOSURE CLASS 2.
6. THE FOLLOWING STRUCTURAL STEEL SHALL BE AASHTO TO M270 GRADE 50 (ASTM A 709): PILING.
7. THE FOLLOWING STRUCTURAL STEEL SHALL BE AASHTO M270 GRADE 36 (ASTM A 709): OTHER PLATES.
8. SEE PROJECT NO. I-25 3(20)244 FOR EXISTING BRIDGE.
9. GRADE 60 REINFORCING STEEL IS REQUIRED.
10. CLEARANCE FROM THE SURFACE OF CONCRETE TO THE FACE OF REINFORCEMENT SHALL BE 2 INCHES UNLESS NOTED OTHERWISE.
11. ALL REINFORCING STEEL SHALL BE EPOXY COATED UNLESS NOTED OTHERWISE.
12. Ⓝ DENOTES NON-COATED REINFORCING STEEL.
13. THE LOCATION OF SPLICES, EXCEPT WHERE SHOWN ON THE PLANS, SHALL BE BASED UPON USING 60 FOOT STOCK LENGTH BARS FOR NO. 6 BARS AND LARGER AND 40 FOOT STOCK LENGTH BARS FOR NO. 4 AND NO. 5 BARS. SPLICE LOCATIONS NOT SHOWN HEREIN SHALL BE APPROVED BY THE ENGINEER. SPLICES SHALL BE ALTERNATELY STAGGERED UNLESS NOTED OTHERWISE.
14. THE CONTRACTOR SHALL BE RESPONSIBLE FOR THE STABILITY OF THE STRUCTURE DURING CONSTRUCTION.
15. STATIONS, ELEVATIONS, AND DIMENSIONS CONTAINED IN THESE PLANS ARE CALCULATED FROM A RECENT FIELD SURVEY. THE CONTRACTOR SHALL VERIFY ALL DEPENDENT DIMENSIONS IN THE FIELD BEFORE ORDERING OR FABRICATING ANY MATERIAL.
16. ALL LONGITUDINAL AND TRANSVERSE DIMENSIONS ARE MEASURED HORIZONTALLY AND INCLUDE NO CORRECTION FOR GRADE.
17. THE SOILS AND FOUNDATION INVESTIGATION FOR THIS PROJECT WAS PERFORMED BY ROCKSOL CONSULTING GROUP. THE SUBSURFACE CONDITIONS AND RECOMMENDATIONS FOR THE PROJECT ARE CONTAINED IN A REPORT DATED 09/17/2020, PROJECT NO. 286.05.
18. THE INFORMATION SHOWN ON THESE PLANS CONCERNING THE TYPE AND LOCATION OF UNDERGROUND UTILITIES IS NOT GUARANTEED TO BE ACCURATE OR ALL-INCLUSIVE. THE CONTRACTOR IS RESPONSIBLE FOR MAKING THEIR OWN DETERMINATION AS TO THE TYPE AND LOCATION OF UNDERGROUND UTILITIES AS MAY BE NECESSARY TO AVOID DAMAGE THERETO. THE CONTRACTOR SHALL CONTACT THE UTILITY NOTIFICATION CENTER OF COLORADO AT 811 AT LEAST 2 DAYS (NOT INCLUDING THE DAY OF NOTIFICATION) PRIOR TO ANY EXCAVATION OR OTHER EARTHWORK.

ABBREVIATIONS:

HCL= HORIZONTAL CONTROL LINE
LOL= LAYOUT LINE
FF = FRONT FACE
BF = BACK FACE
EF = EACH FACE
CLR= CLEAR
SA = SPECTRAL ACCELERATION
U.N.O.= UNLESS NOTED OTHERWISE
ES = EACH SIDE
TOW= TOP OF WALL
ROW= RIGHT OF WAY
EL = ELEVATION
EXP = EXPANSION
JNT = JOINT

SEE STANDARD PLAN M-100-2 FOR ADDITIONAL ABBREVIATIONS.

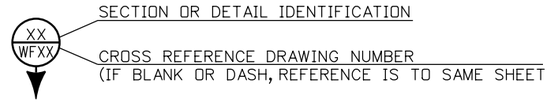

DESIGN DATA:

AASHTO LRFD, NINTH EDITION, 2020.

DESIGN METHOD: LOAD AND RESISTANCE FACTOR DESIGN.

SOIL PROPERTIES: STRUCTURE BACKFILL (CLASS 2) (SPECIAL): = 125 pcf, Φ = 22°

REINFORCED CONCRETE:

CDOT CLASS D CONCRETE: f'c = 4,500 PSI
REINFORCING STEEL: fy = 60,000 PSI

SEISMIC DESIGN CRITERIA:

EARTHQUAKE DESIGN METHOD: AASHTO LOAD AND RESISTANCE FACTOR DESIGN
LATITUDE = 40.3063
LONGITUDE = -104.9811

AASHTO SPECTRUM FOR 7% PE IN 75 YEARS (1000 YR RETURN PERIOD)

PERIOD (SEC)	SA (g)
0.0	0.058 PGA - SITE CLASS D
0.2	0.124 SS - SITE CLASS D
1.0	0.033 S1 - SITE CLASS D

SPECTRAL RESPONSE ACCELERATIONS:
AS = FPGA*PGA, SDS = FA*SS, AND SD1 = FV*S1
FPGA = 1.6, FA = 1.6, FV = 2.4
PERIOD SA

SEISMIC ZONE: 1

RESPONSE MODIFICATION FACTOR = 1.0 (ELASTIC DESIGN)

INDEX OF DRAWINGS:

WF01 GENERAL INFORMATION
WF02 SUMMARY OF QUANTITIES
WF03 GENERAL PLAN
WF04 SOUTHWEST LOWER WALL GENERAL PLAN - ELEVATION
WF05 SOUTHWEST MONUMENT WALL GENERAL PLAN - ELEVATION
WF06 NORTHWEST LOWER WALL GENERAL PLAN - ELEVATION
WF07 NORTHWEST MONUMENT WALL GENERAL PLAN - ELEVATION
WF08 SOUTHEAST LOWER WALL GENERAL PLAN - ELEVATION
WF09 SOUTHEAST MONUMENT WALL GENERAL PLAN - ELEVATION
WF10 NORTHEAST LOWER WALL GENERAL PLAN - ELEVATION
WF11 NORTHEAST MONUMENT WALL GENERAL PLAN - ELEVATION
WF12 ENGINEERING GEOLOGY - SOUTH
WF13 ENGINEERING GEOLOGY - NORTH
WF14 CONSTRUCTION LAYOUT
WF15 FOUNDATION LAYOUT - SOUTH
WF16 FOUNDATION LAYOUT - NORTH
WF17 PILING DETAILS
WF18 SW MONUMENT WALL
WF19 NW MONUMENT WALL
WF20 SE MONUMENT WALL
WF21 NE MONUMENT WALL
WF22 MONUMENT WALL DETAILS
WF23 MONUMENT WALL DETAILS
WF24 LOWER WALL DETAILS
WF25 EXCAVATION AND BACKFILL DETAILS
WF26 BRACKET - TYPE 1
WF27 BRACKET - TYPE 2
WF28 INSTALLATION ON SUPERSTRUCTURE
WF29 INSTALLATION ON LOWER WALLS AND CORNER MONUMENTS
WF30 FENCE LAYOUT C-17-FX
WF31 FENCE LAYOUT C-17-FXA
WF32 FENCE (SPECIAL)
WF33 FENCE METAL (36 INCH)

WALL DESCRIPTIONS:

UPPER MONUMENT WALLS ARE REINFORCED CONCRETE WALLS WITH BRICK VENEER. WALLS SUPPORTED BY DEEP FOUNDATION DRIVEN PILES AND PILE CAP.
LENGTH ALONG HCL = 111'-4"
HEIGHT VARIES FROM 12.1' TO 31.7'

LOWER WALLS ARE VERTICAL CANTILEVER RETAINING WALLS.
LENGTH ALONG HCL = 89'-6"
HEIGHT IS 9'-0"

TEMPORARY CONSTRUCTION NAME	STRUCTURE NUMBER **
SW MONUMENT WALL	R025A252234LRA
NW MONUMENT WALL	R025A252262LRA
SE MONUMENT WALL	R025A252239RRA
NE MONUMENT WALL	R025A252262RRA
SW LOWER WALL	R025A252231LRA
NW LOWER WALL	R025A252263LRA
SE LOWER WALL	R025A252240RRA
NE LOWER WALL	R025A252261RRA
	C-17-FX
	C-17-FXA

Design			Detail			Quantities		
	INITIAL	DATE		INITIAL	DATE		INITIAL	DATE
Designed By	DMA	5/21	Detailed By	DG	5/21	Quantities By	DMA	5/21
Checked By	AAD	10/21	Checked By	MRM	5/21	Checked By	AAD	5/21

10/25/2021 CDOT-DefaultPrinter_ORD.pltcfg CDOT-PenTable.tbl

adams 12:08:42 PM pw:\\mulleren-pw.bentley.com:mulleren-pw-01\Documents\2012 Projects\12-003 I-25 SH 66 to SH 402\CP5\Bridge\RockSol\Drawings\23019_CP5_WF01_General Information.dgn

Print Date: 10/25/2021
File Name: 23019_CP5_WF01_General Information.dgn
Horiz. Scale: 1:1 Vert. Scale: As Noted
Staff Bridge Branch: Unit 0222 Unit Leader: AAH
Sub-consultant RockSol Consulting Group, Inc.

Sheet Revisions		
Date:	Comments	Init.

Colorado Department of Transportation
1050 Lee Hill Road
Boulder, CO 80302
Phone: 303-546-5676
FAX: 303-444-0751
Region 4 ALG

As Constructed
No Revisions:
Revised:
Void:

I-25 EXPR. LANES SEG 5&6 CP5
GENERAL INFORMATION
Designer: D. ADAMS
Detailer: D. GONZALES
Sheet Subset: WALL
Structure Numbers **
Subset Sheets: WF01

Project No./Code
NHPP 0253-275
23019
Sheet Number 13

RFC SUBMITTAL - NOT FOR CONSTRUCTION - OCTOBER 25, 2021

Summary of Quantities SH-60 B Monument and Landscape Walls CP-5

	Item No.	Description	Unit	Temp. Constr. Name SW Monument Wall SW Lower Wall Structure No.** R025A252234LRA R025A252231LRA	Temp. Constr. Name SE Monument Wall SE Lower Wall Structure No.** R025A252239RRA R025A252240RRA	Temp. Constr. Name NW Monument Wall NW Lower Wall Structure No.** R025A252262LRA R025A252263LRA	Temp. Constr. Name NE Monument Wall NE Lower Wall Structure No.** R025A252262RRA R025A252261RRA	C-17-FX **	C-17-FXA **	**Total**	As-Constructed	Unit Cost	Total Cost
	206-00000	Structure Excavation	CY	82	0	44	0			126			
	206-00100	Structure Backfill (Class 1)	CY	218	216	216	218			868			
	206-00200	Structure Backfill (Class 2)	CY	640	558	575	601			2,374			
	206-01803	Shoring (Area 23)	LS	1						1			
	206-01804	Shoring (Area 24)	LS			1				1			
	206-01805	Shoring (Area 25)	LS				1			1			
	206-01806	Shoring (Area 26)	LS		1					1			
	502-00460	Pile Tip	EA	16	16	16	16			64			
	502-00500	Complete Joint Penetration (CJP) Splice	EA	2	2	2	2			8			
①	502-02010	Dynamic Pile Test	EA	1	1	1	1			4			
	502-11489	Steel Piling (HP 14x89)	LF	592	569	641	568			2,370			
②	519-02000	Corner Monument	EA	1	1	1	1			4			
	601-03000	Concrete Class D	CY	87.2	86.4	86.6	87.3			347.5			
	601-40400	Structural Concrete Stain	SY	103	104	104	104			415			
	602-00000	Reinforcing Steel	LB	15,140	15,140	15,140	15,140			60,560			
	605-83000	Geocomposite Drain	SY	8	8	8	8			32			
	607-11530	Fence (Special)	LF						277	277			
	607-11937	Fence Metal (36 Inch)	LF					483	241	724			

① ITEM NOT ANTICIPATED, SINCE DYNAMIC PILE TEST FROM NEAREST CP-4 SH 60B BRIDGE ABUTMENT PILES WILL ESTABLISH PILE DRIVING CRITERIA FOR PILES SUPPORTING CORNER MONUMENTS

② ITEM INCLUDES BRICK MASONRY VENEER, PRECAST CONCRETE CAPS, PRECAST CONCRETE INSET PANELS, REINFORCED CONCRETE INTERIOR WALLS, FORMED VOID (STAY-IN-PLACE TIMBER FORMS OR STYROFOAM FORMS), REINFORCED CONCRETE PILE CAP, CONCRETE CLASS D, EPOXY COATED REINFORCING STEEL, STEEL CABLES, CLEVISES, BRACKETS, CURVED REINFORCED CONCRETE WALLS, GEOCOMPOSITE DRAIN, 2" ø PVC PIPES, STEEL BANDING, STAR INSERTS MOUNTED ON BRIDGE RAIL, CONCRETE STAIN ON MONUMENTS, PHRASE ON LOWER WALLS

RFC SUBMITTAL - NOT FOR CONSTRUCTION - OCTOBER 25, 2021

Design	INITIAL	DATE	Detail	INITIAL	DATE	Quantities	INITIAL	DATE
Designed By	DMA	5/21	Detailed By	DG	5/21	Quantities By	DMA	5/21
Checked By	AAD	10/21	Checked By	MRM	5/21	Checked By	AAD	5/21

adams 2:44:52 PM pw:\\mulleng-pw.bentley.com:mulleng-pw-01\Documents\2012 Projects\12-003 I-25 SH 66 to SH 402\CP5\Bridge\RockSol\Drawings\23019_CP5_WF02_Summary_of_Quantities.dgn

10/8/2021 CDOT-DefaultPrinter_ORD.pltcfg CDOT-PenTable.tbl

Print Date: 10/8/2021
File Name: 23019_CP5_WF02_Summary_of_Quantities.dgn
Horiz. Scale: 1:1 Vert. Scale: As Noted
Staff Bridge Branch: Unit 0222 Unit Leader: AAH
Sub-consultant RockSol Consulting Group, Inc.

Sheet Revisions

Date:	Comments	Init.

Colorado Department of Transportation
1050 Lee Hill Road
Boulder, CO 80302
Phone: 303-546-5676
FAX: 303-444-0751
Region 4 ALG

As Constructed
No Revisions:
Revised:
Void:

I-25 EXPR. LANES SEG 5&6 CP5
SUMMARY OF QUANTITIES
Designer: D. ADAMS
Detailer: D. GONZALES
Sheet Subset: WALL
Structure Numbers **
Subset Sheets: WF02

Project No./Code
NHPP 0253-275
23019
Sheet Number 14

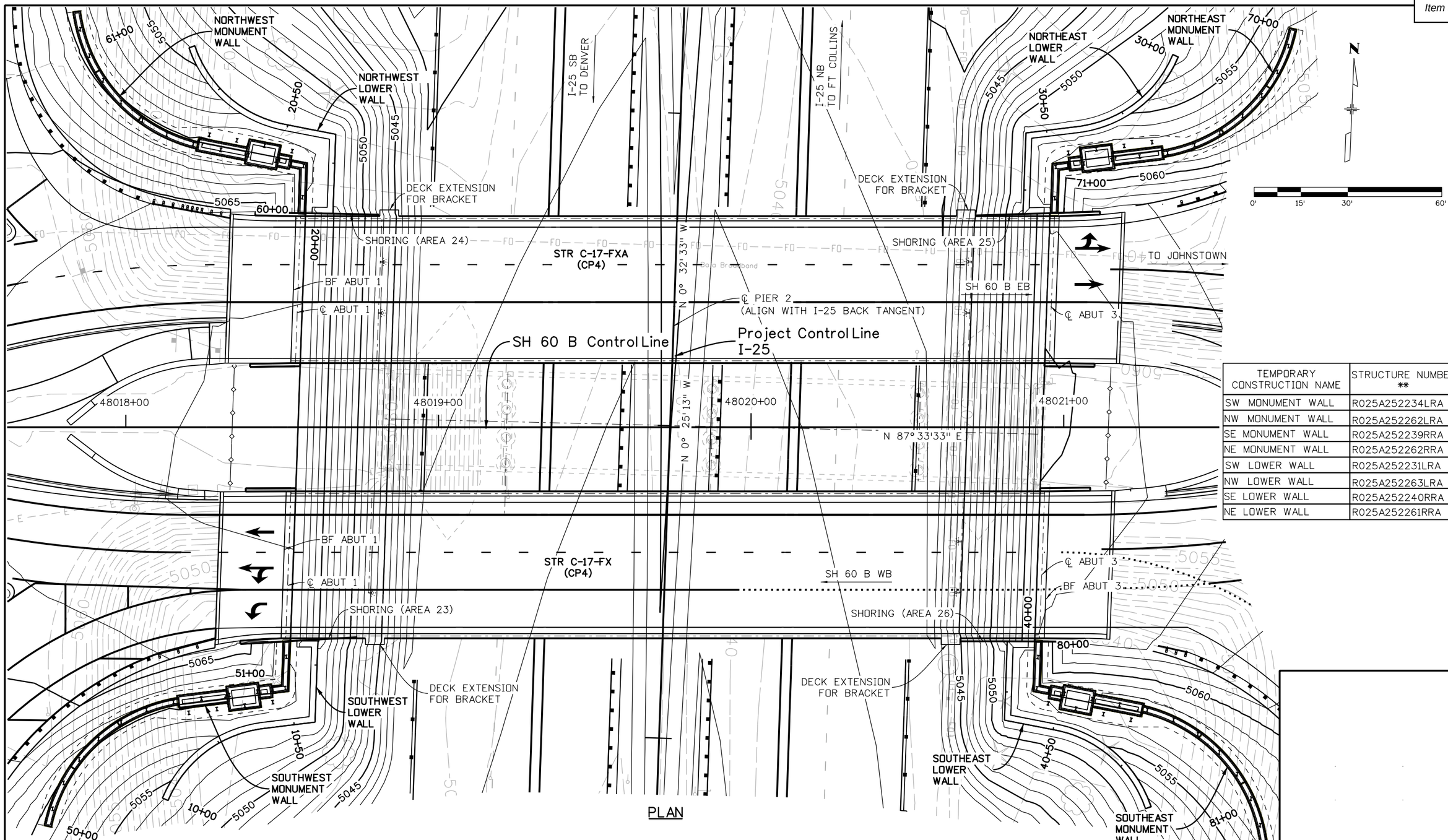

TEMPORARY CONSTRUCTION NAME	STRUCTURE NUMBER **
SW MONUMENT WALL	R025A252234LRA
NW MONUMENT WALL	R025A252262LRA
SE MONUMENT WALL	R025A252239RRA
NE MONUMENT WALL	R025A252262RRA
SW LOWER WALL	R025A252231LRA
NW LOWER WALL	R025A252263LRA
SE LOWER WALL	R025A252240RRA
NE LOWER WALL	R025A252261RRA

RFC SUBMITTAL - NOT FOR CONSTRUCTION - OCTOBER 25, 2021

Design	INITIAL	DATE	Detail	INITIAL	DATE	Quantities	INITIAL	DATE
Designed By	DMA	5/21	Detailed By	DG	5/21	Quantities By	DMA	5/21
Checked By	AAD	10/21	Checked By	MRM	5/21	Checked By	AAD	5/21

adams 4:31:27 PM pw:\\mulleren-pw.bentley.com:mulleren-pw-01\Documents\2012 Projects\12-003 I-25 SH 66 to SH 402\CP5\Bridge\RockSol\Drawings\23019_CP5_WF03_Gen_Layout_Plan_&_Elev.dgn

10/6/2021 CDOT-DefaultPrinter_GRD.pltcfg CDOT-PenTable.tbl

Print Date: 10/6/2021
File Name: 23019_CP5_WF03_Gen_Layout_Plan_&_Elev.dgn
Horiz. Scale: 1:30 Vert. Scale: As Noted
Staff Bridge Branch: Unit 0222 Unit Leader: AAH
Sub-consultant RockSol Consulting Group, Inc.

Sheet Revisions		
Date:	Comments	Init.

Colorado Department of Transportation
1050 Lee Hill Road
Boulder, CO 80302
Phone: 303-546-5676
FAX: 303-444-0751
Region 4 ALG

As Constructed
No Revisions:
Revised:
Void:

I-25 EXPR. LANES SEG 5&6 CP5
GENERAL PLAN
Designer: D. ADAMS
Detailer: D. ADAMS
Sheet Subset: WALL
Structure Numbers **
Subset Sheets: WF03

Project No./Code
NHPP 0253-275
23019
Sheet Number 15

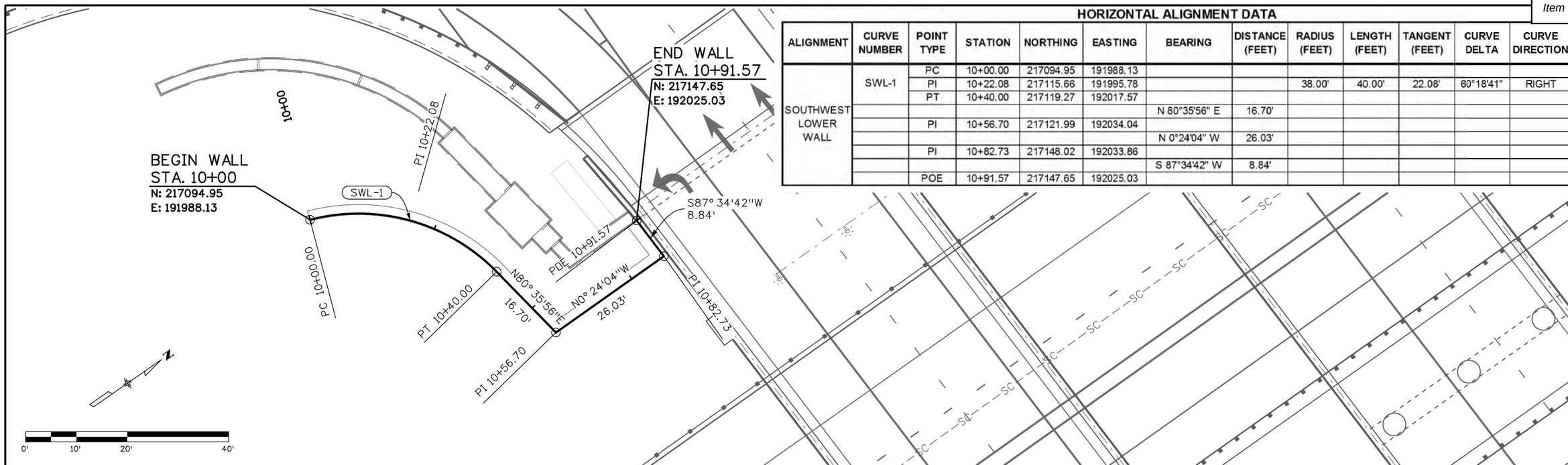

HORIZONTAL ALIGNMENT DATA

ALIGNMENT	CURVE NUMBER	POINT TYPE	STATION	NORTHING	EASTING	BEARING	DISTANCE (FEET)	RADIUS (FEET)	LENGTH (FEET)	TANGENT (FEET)	CURVE DELTA	CURVE DIRECTION
SOUTHWEST LOWER WALL	SWL-1	PC	10+00.00	217094.95	191988.13							
		PI	10+22.08	217115.66	191995.78			38.00'	40.00'	22.08'	60°18'41"	RIGHT
		PT	10+40.00	217119.27	192017.57							
						N 80°35'56" E	16.70'					
		PI	10+56.70	217121.99	192034.04							
						N 0°24'04" W	26.03'					
		PI	10+82.73	217148.02	192033.86							
						S 87°34'42" W	8.84'					
		POE	10+91.57	217147.65	192025.03							

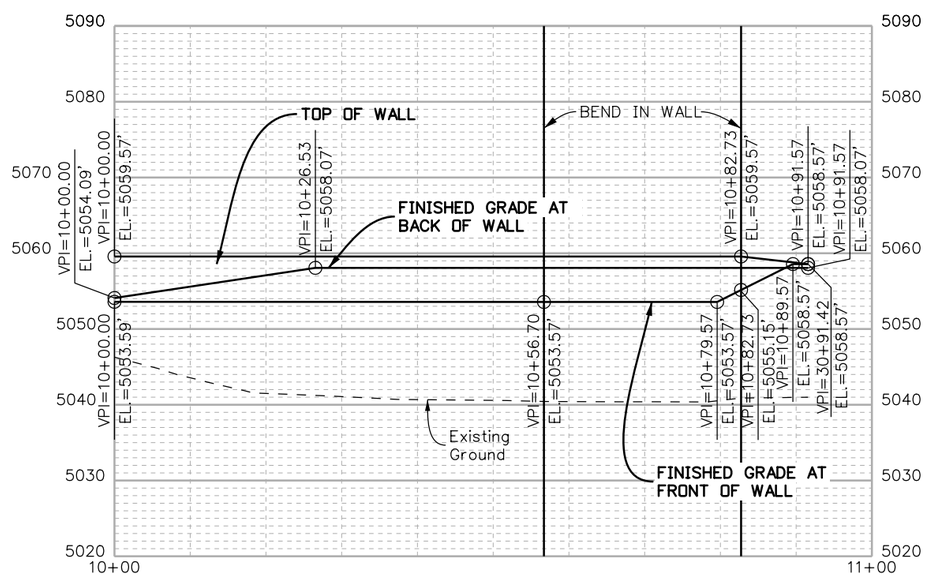

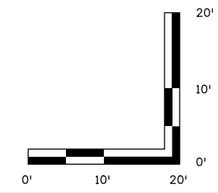

RFC SUBMITTAL - NOT FOR CONSTRUCTION - OCTOBER 25, 2021

Print Date: 10/21/2021	Sheet Revisions	Colorado Department of Transportation	As Constructed
Drawing File Name: 23019Walls_Plan2.dgn	Date: / Comments / Init.	1050 Lee Hill Road, Boulder, CO 80302, Phone: 303-546-5676, FAX: 303-444-0751	No Revisions:
Horiz. Scale: 1:20 Vert. Scale: As Noted		Region 4 ALG	Revised:
Unit Information Unit Leader Initials			Void:
MULLER ENGINEERING COMPANY			

SOUTHWEST LOWER WALL
GENERAL PLAN - ELEVATION

Designer:	EKS	Structure Numbers	
Detailer:	DLD		
Sheet Subset:	WALL	Subset Sheets:	WF04

Project No./Code
NHPP 0253-275
23019
Sheet Number 16

mullerpw01app02$ 6:34:23 PM \\mullerpw01app02\ICS_pdf_work_dir\13073\6342_2\23019Walls_Plan2.dgn
10/21/2021 iplotdrvm.plt MEC-Standard.tbl

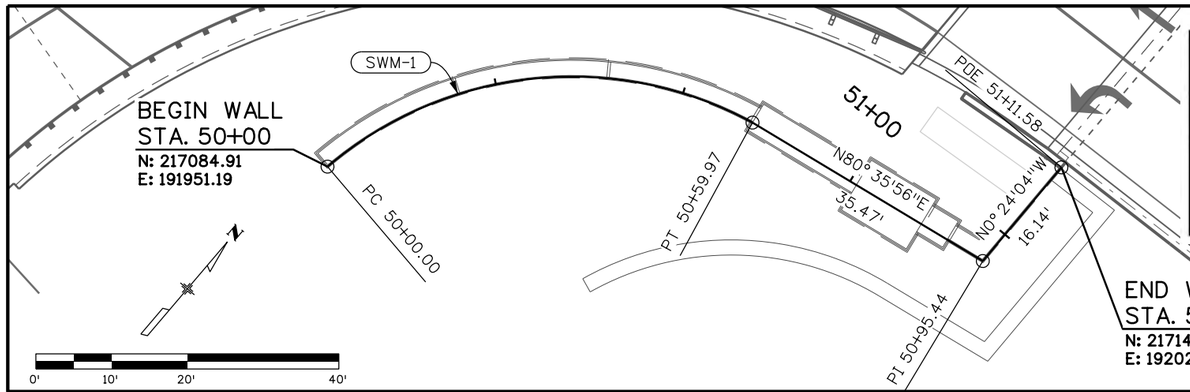

HORIZONTAL ALIGNMENT DATA

ALIGNMENT	CURVE NUMBER	POINT TYPE	STATION	NORTHING	EASTING	BEARING	DISTANCE (FEET)	RADIUS (FEET)	LENGTH (FEET)	TANGENT (FEET)	CURVE DELTA	CURVE DIRECTION
SOUTHWEST MONUMENT WALL	SWM-1	PC	50+00.00	217084.91	191951.19							
		PI	50+34.22	217118.69	191956.66			49.83'	59.97'	34.22'	114°58'29"	RIGHT
		PT	50+59.97	217125.71	191990.15							
						N 80°35'56" E	35.47'					
		PI	50+95.44	217131.51	192025.14							
						N 0°24'04" W	16.14'					
		POE	51+11.58	217147.65	192025.03							

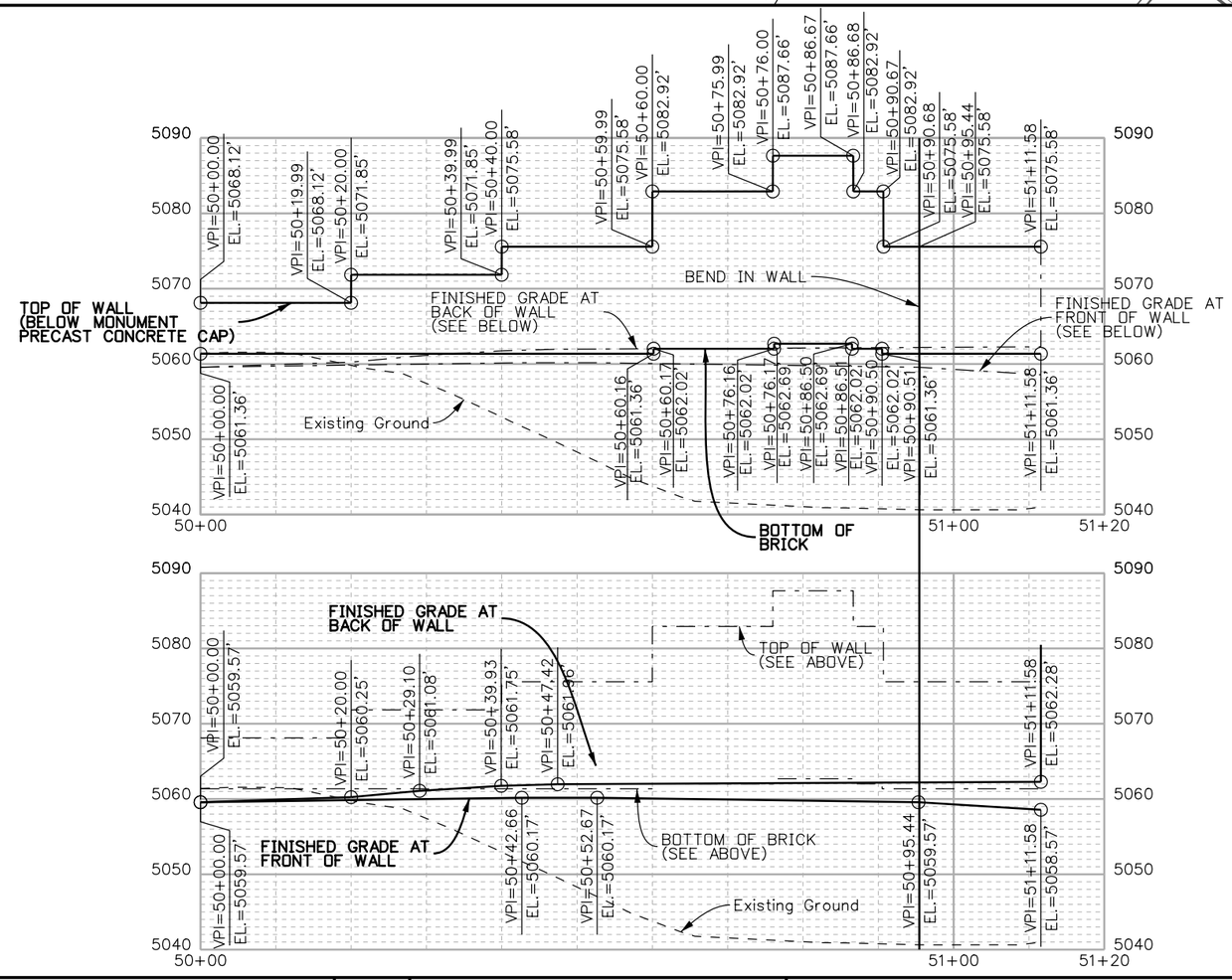

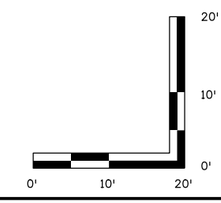

RFC SUBMITTAL - NOT FOR CONSTRUCTION - OCTOBER 25, 2021

Print Date: 10/21/2021	Sheet Revisions	Colorado Department of Transportation	As Constructed
Drawing File Name: 23019Walls_Plan3.dgn	Date: / Comments / Init.	1050 Lee Hill Road, Boulder, CO 80302, Phone: 303-546-5676, FAX: 303-444-0751	No Revisions:
Horiz. Scale: 1:20 Vert. Scale: As Noted		Region 4 ALG	Revised:
Unit Information Unit Leader Initials			Void:
MULLER ENGINEERING COMPANY			

SOUTHWEST MONUMENT WALL
GENERAL PLAN - ELEVATION

Designer:	EKS	Structure Numbers	
Detailer:	DLD		
Sheet Subset:	WALL	Subset Sheets:	WF05

Project No./Code: NHPP 0253-275
23019
Sheet Number 17

mullerpw01app02$ 6:38:42 PM \\mullerpw01app02\ICS_pdf_work_dir\13073\6342_3\23019Walls_Plan3.dgn
10/21/2021 iplotdrvm.plt MEC-Standard.tbl

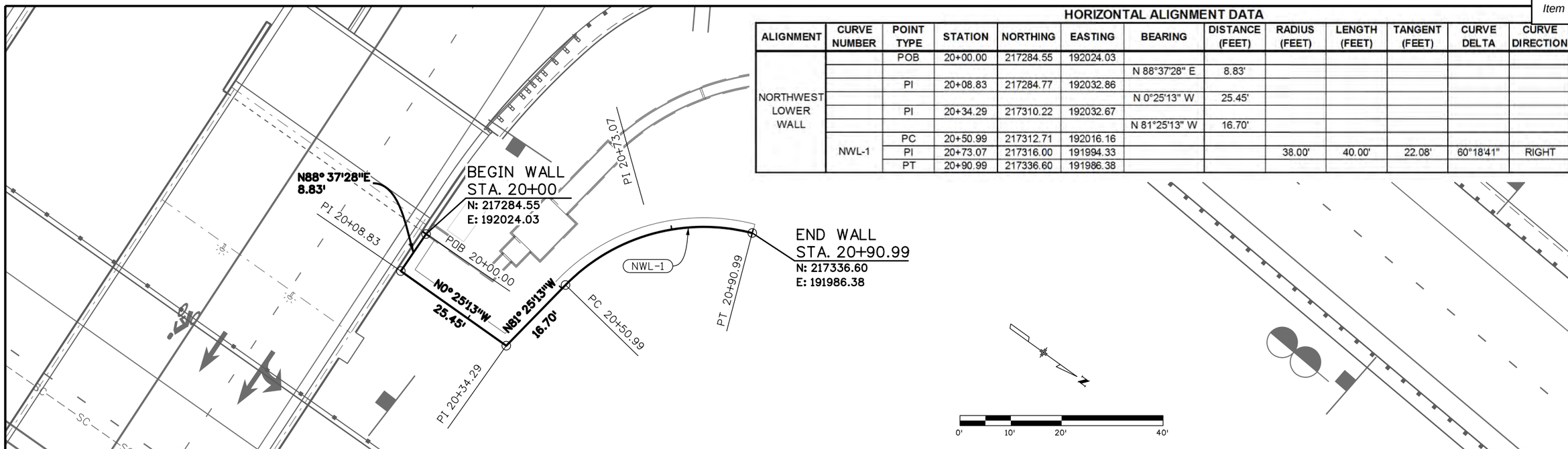

HORIZONTAL ALIGNMENT DATA

ALIGNMENT	CURVE NUMBER	POINT TYPE	STATION	NORTHING	EASTING	BEARING	DISTANCE (FEET)	RADIUS (FEET)	LENGTH (FEET)	TANGENT (FEET)	CURVE DELTA	CURVE DIRECTION
NORTHWEST LOWER WALL		POB	20+00.00	217284.55	192024.03							
						N 88°37'28" E	8.83'					
		PI	20+08.83	217284.77	192032.86							
						N 0°25'13" W	25.45'					
		PI	20+34.29	217310.22	192032.67							
						N 81°25'13" W	16.70'					
	NWL-1	PC	20+50.99	217312.71	192016.16							
		PI	20+73.07	217316.00	191994.33			38.00'	40.00'	22.08'	60°18'41"	RIGHT
		PT	20+90.99	217336.60	191986.38							

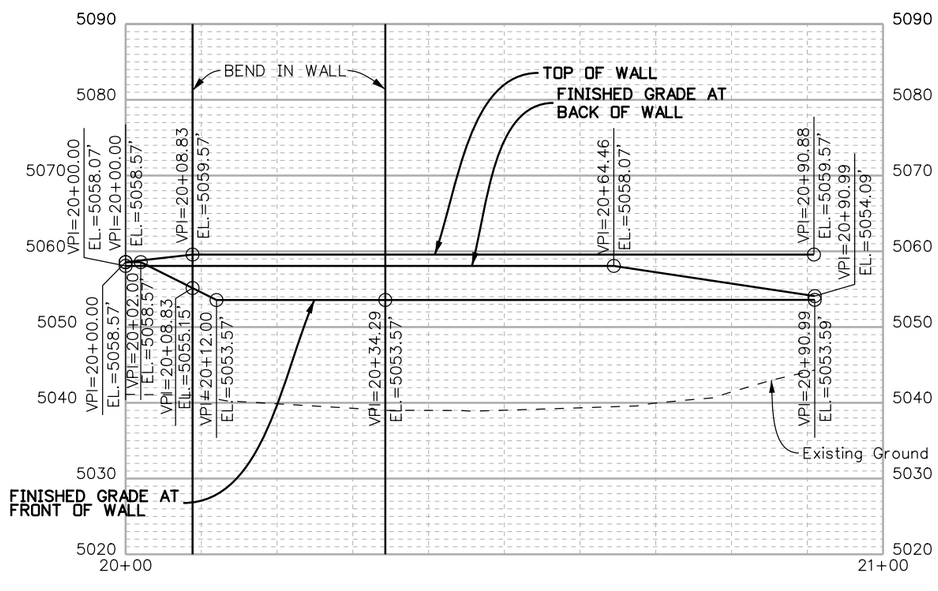

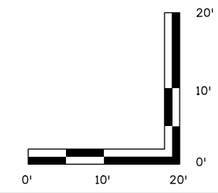

RFC SUBMITTAL - NOT FOR CONSTRUCTION - OCTOBER 25, 2021

mullerpw01app02$ 6:34:13 PM \\mullerpw01app02\ICS_pdf_work_dir\13073\6342_4\23019Walls_Plan4.dgn
10/21/2021 iplotdrvm.plt MEC-Standard.tbl

Print Date: 10/21/2021	Sheet Revisions	Colorado Department of Transportation	As Constructed
Drawing File Name: 23019Walls_Plan4.dgn	Date: / Comments / Init.	1050 Lee Hill Road, Boulder, CO 80302, Phone: 303-546-5676, FAX: 303-444-0751	No Revisions:
Horiz. Scale: 1:20 Vert. Scale: As Noted		Region 4 ALG	Revised:
Unit Information Unit Leader Initials			Void:
MULLER ENGINEERING COMPANY			

NORTHWEST LOWER WALL
GENERAL PLAN - ELEVATION

Designer:	EKS	Structure Numbers	
Detailer:	DLD		
Sheet Subset:	WALL	Subset Sheets:	WF06

Project No./Code
NHPP 0253-275
23019
Sheet Number 18

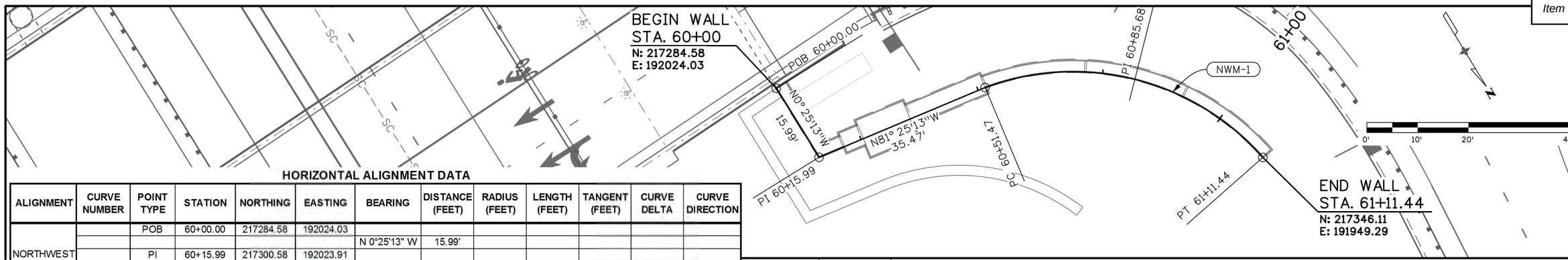

HORIZONTAL ALIGNMENT DATA

ALIGNMENT	CURVE NUMBER	POINT TYPE	STATION	NORTHING	EASTING	BEARING	DISTANCE (FEET)	RADIUS (FEET)	LENGTH (FEET)	TANGENT (FEET)	CURVE DELTA	CURVE DIRECTION
NORTHWEST MONUMENT WALL		POB	60+00.00	217284.58	192024.03							
						N 0°25'13" W	15.99'					
		PI	60+15.99	217300.58	192023.91							
						N 81°25'13"	35.47'					
	NWM-1	PC	60+51.47	217305.87	191988.83							
		PI	60+85.68	217312.41	191955.25			49.83'	59.97'	34.22'	68°56'54"	RIGHT
		PT	61+11.44	217346.11	191949.29							

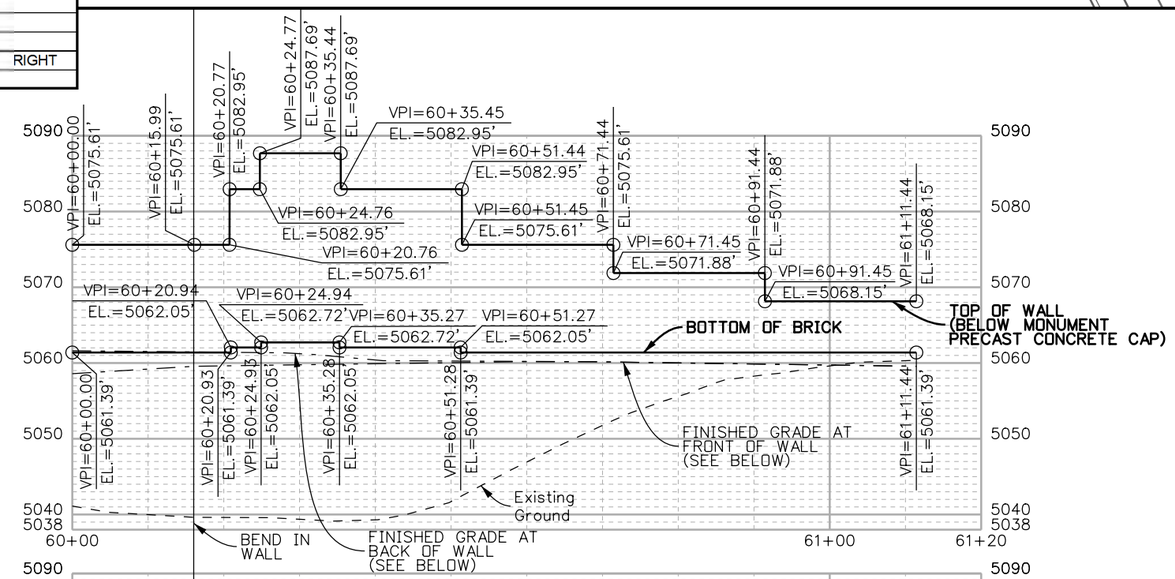

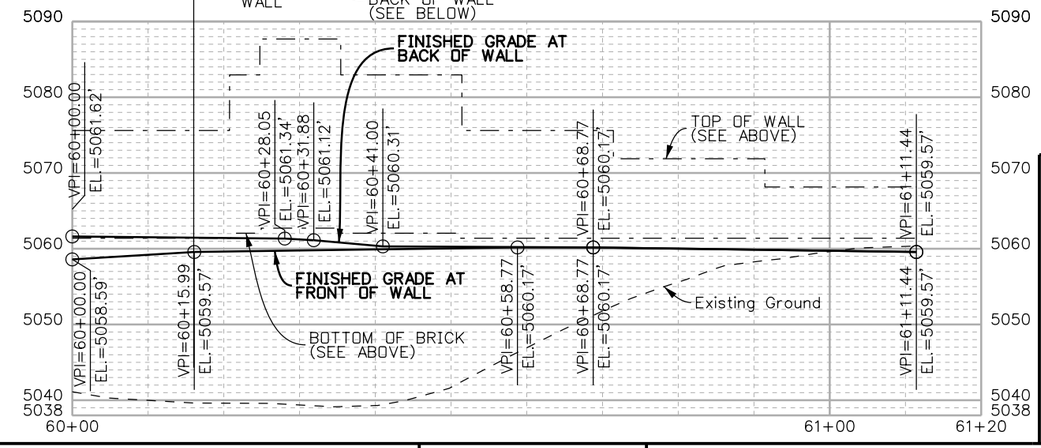

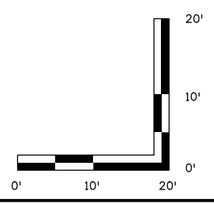

RFC SUBMITTAL - NOT FOR CONSTRUCTION - OCTOBER 25, 2021

Print Date: 10/21/2021	Sheet Revisions	Colorado Department of Transportation	As Constructed
Drawing File Name: 23019Walls_Plan5.dgn	Date: / Comments / Init.	1050 Lee Hill Road, Boulder, CO 80302, Phone: 303-546-5676, FAX: 303-444-0751	No Revisions:
Horiz. Scale: 1:20 Vert. Scale: As Noted		Region 4 ALG	Revised:
Unit Information Unit Leader Initials			Void:
MULLER ENGINEERING COMPANY			

NORTHWEST MONUMENT WALL
GENERAL PLAN - ELEVATION

Designer:	EKS	Structure Numbers	
Detailer:	DLD		
Sheet Subset:	WALL	Subset Sheets:	WF07

Project No./Code: NHPP 0253-275
23019
Sheet Number 19

mullerpw01app02$ 6:38:46 PM \\mullerpw01app02\ICS_pdf_work_dir\13073\6342_8\23019Walls_Plan5.dgn
10/21/2021 iplotdrvm.plt MEC-Standard.tbl

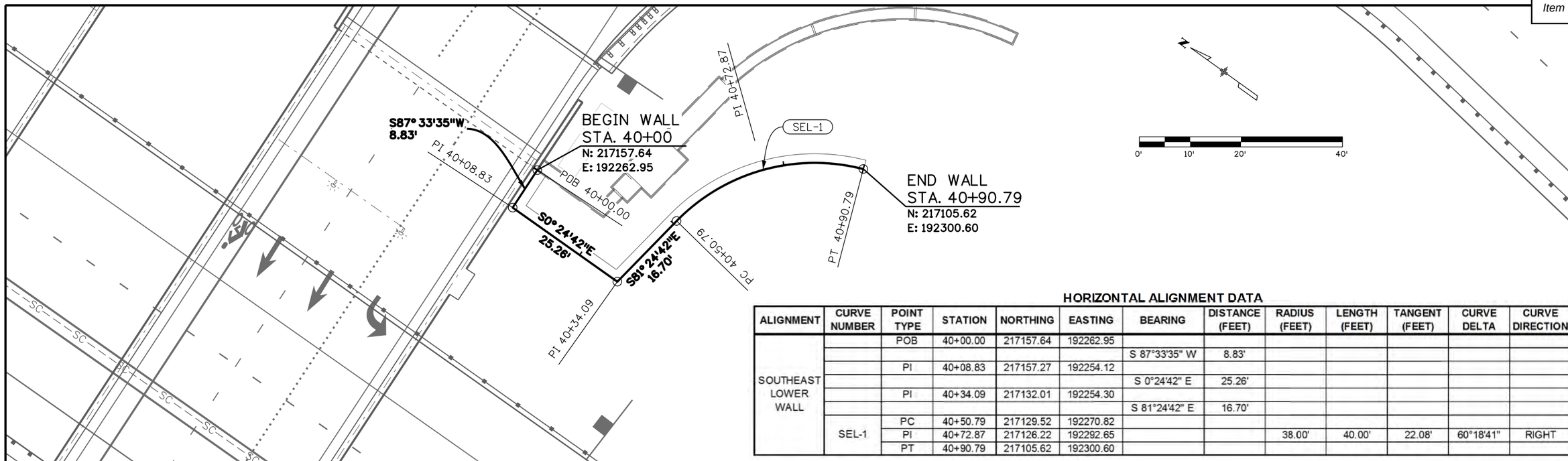

HORIZONTAL ALIGNMENT DATA

ALIGNMENT	CURVE NUMBER	POINT TYPE	STATION	NORTHING	EASTING	BEARING	DISTANCE (FEET)	RADIUS (FEET)	LENGTH (FEET)	TANGENT (FEET)	CURVE DELTA	CURVE DIRECTION
SOUTHEAST LOWER WALL		POB	40+00.00	217157.64	192262.95							
						S 87°33'35" W	8.83'					
		PI	40+08.83	217157.27	192254.12							
						S 0°24'42" E	25.26'					
		PI	40+34.09	217132.01	192254.30							
						S 81°24'42" E	16.70'					
	SEL-1	PC	40+50.79	217129.52	192270.82							
		PI	40+72.87	217126.22	192292.65			38.00'	40.00'	22.08'	60°18'41"	RIGHT
		PT	40+90.79	217105.62	192300.60							

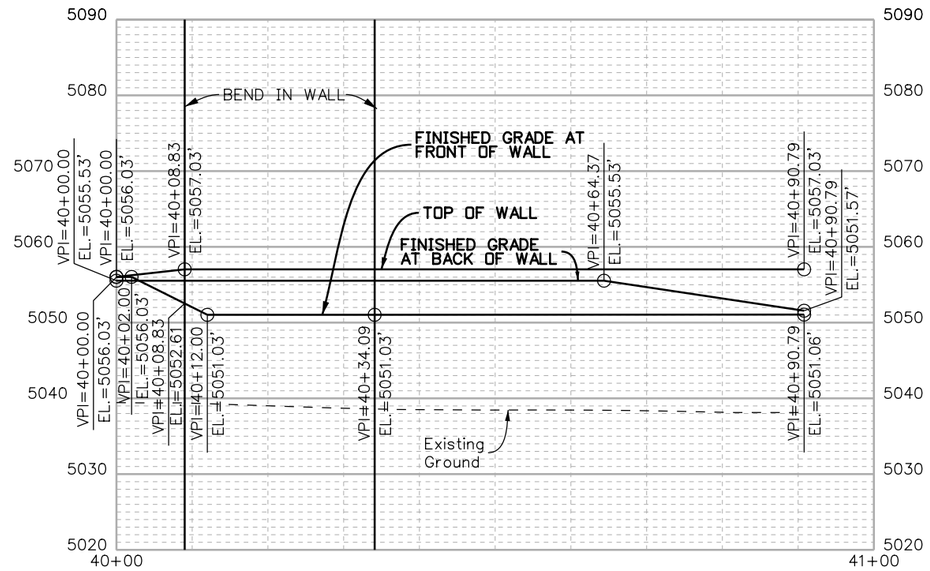

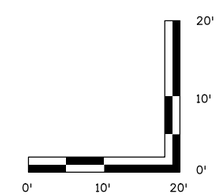

Print Date: 10/21/2021	Sheet Revisions	Colorado Department of Transportation	As Constructed
Drawing File Name: 23019Walls_Plan6.dgn	Date: / Comments / Init.	1050 Lee Hill Road, Boulder, CO 80302, Phone: 303-546-5676, FAX: 303-444-0751	No Revisions:
Horiz. Scale: 1:20 / Vert. Scale: As Noted		Region 4 ALG	Revised:
Unit Information / Unit Leader Initials			Void:
MULLER ENGINEERING COMPANY			

SOUTHEAST LOWER WALL
GENERAL PLAN - ELEVATION

Designer:	EKS	Structure Numbers	
Detailer:	DLD		
Sheet Subset:	WALL	Subset Sheets:	WF08

Project No./Code: NHPP 0253-275
23019
Sheet Number 20

RFC SUBMITTAL - NOT FOR CONSTRUCTION - OCTOBER 25, 2021

mullerpw01app02$ 6:38:46 PM \\mullerpw01app02\ICS_pdf_work_dir\13073\6342_5\23019Walls_Plan6.dgn
10/21/2021 iplotdrvm.plt MEC-Standard.tbl

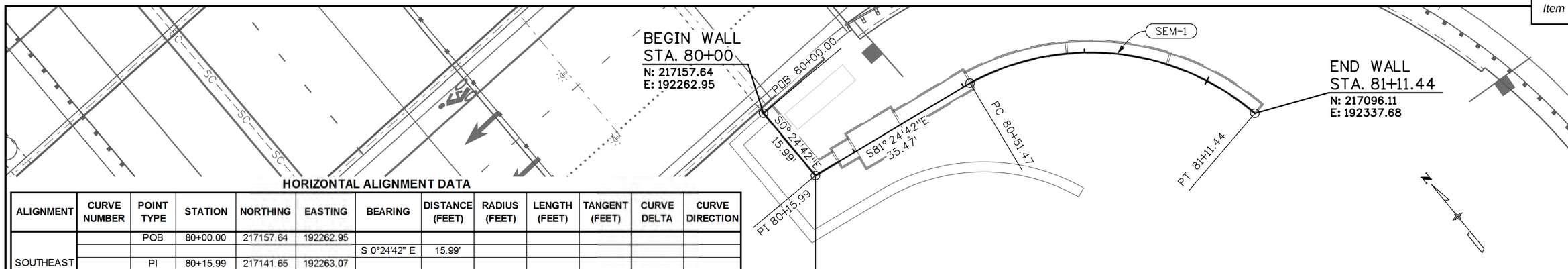

HORIZONTAL ALIGNMENT DATA

ALIGNMENT	CURVE NUMBER	POINT TYPE	STATION	NORTHING	EASTING	BEARING	DISTANCE (FEET)	RADIUS (FEET)	LENGTH (FEET)	TANGENT (FEET)	CURVE DELTA	CURVE DIRECTION
SOUTHEAST MONUMENT WALL		POB	80+00.00	217157.64	192262.95							
						S 0°24'42" E	15.99'					
		PI	80+15.99	217141.65	192263.07							
						S 81°24'42" E	35.47'					
	SEM-1	PC	80+51.47	217136.35	192298.14							
		PI	80+85.68	217129.80	192331.73			49.83'	59.97'	34.22'	68°56'54"	RIGHT
		PT	81+11.44	217096.11	192337.68							

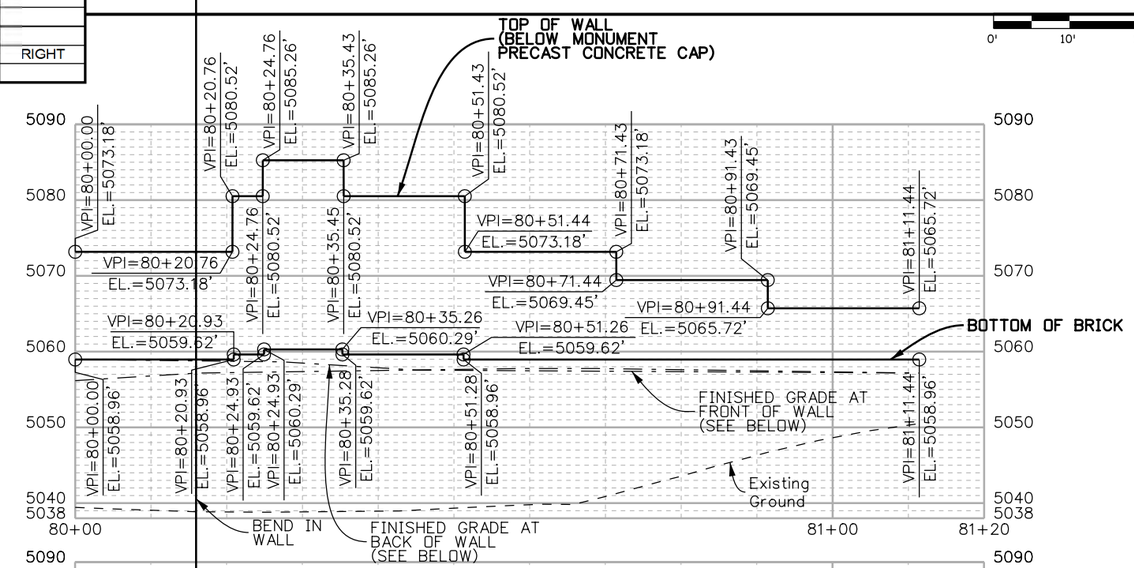

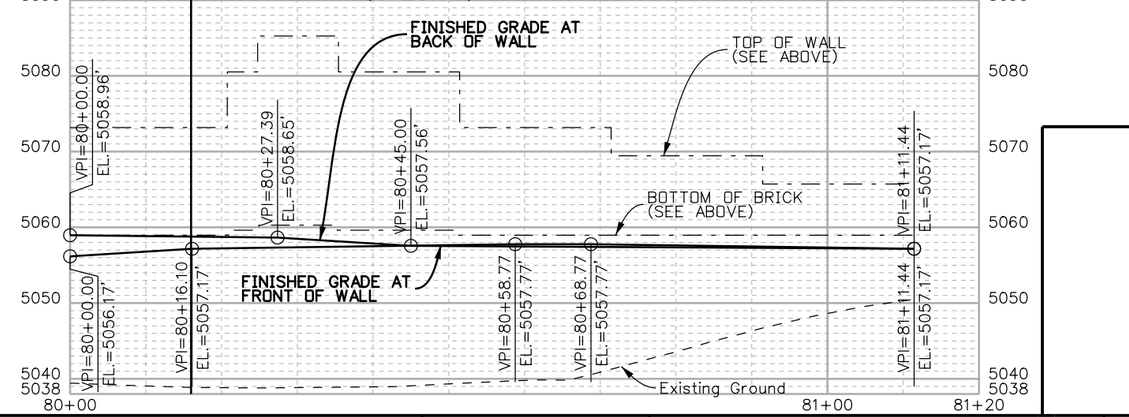

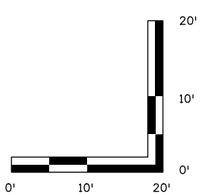

Print Date: 10/21/2021	Sheet Revisions	Colorado Department of Transportation	As Constructed
Drawing File Name: 23019Walls_Plan7.dgn	Date: / Comments / Init.	1050 Lee Hill Road, Boulder, CO 80302, Phone: 303-546-5676, FAX: 303-444-0751	No Revisions:
Horiz. Scale: 1:20 Vert. Scale: As Noted		Region 4 ALG	Revised:
Unit Information Unit Leader Initials			Void:
MULLER ENGINEERING COMPANY			

SOUTHEAST MONUMENT WALL GENERAL PLAN - ELEVATION			Project No./Code
Designer: EKS	Structure Numbers		NHPP 0253-275
Detailer: DLD			23019
Sheet Subset: WALL	Subset Sheets: WF09		Sheet Number 21

RFC SUBMITTAL - NOT FOR CONSTRUCTION - OCTOBER 25, 2021

mullerpw01app02$ 6:34:15 PM \\mullerpw01app02\ICS_pdf_work_dir\13073\6342_7\23019Walls_Plan7.dgn
MEC-Standard.tbl
mullerpw01app02$ 10/21/2021 iplotdrvm.plt

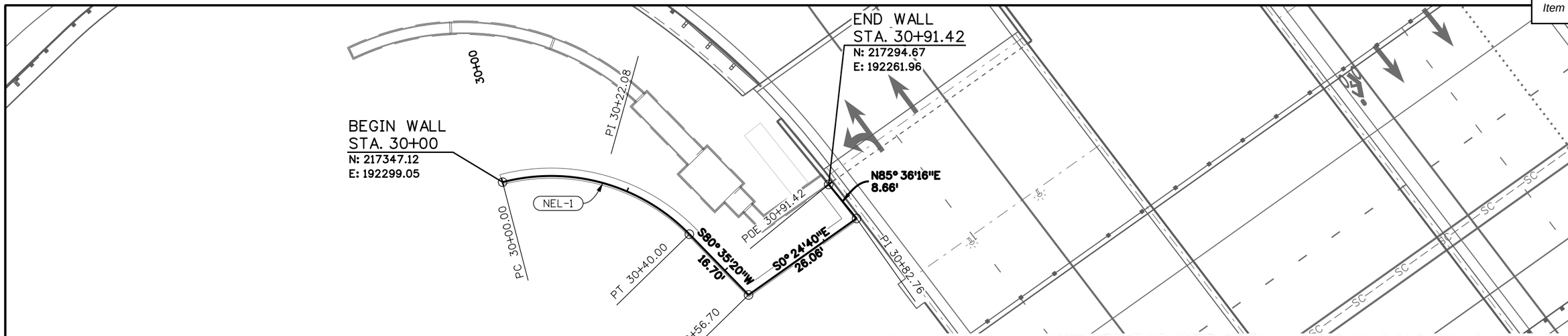

HORIZONTAL ALIGNMENT DATA

ALIGNMENT	CURVE NUMBER	POINT TYPE	STATION	NORTHING	EASTING	BEARING	DISTANCE (FEET)	RADIUS (FEET)	LENGTH (FEET)	TANGENT (FEET)	CURVE DELTA	CURVE DIRECTION
NORTHEAST LOWER WALL	NEL-1	PC	30+00.00	217347.12	192299.05							
		PI	30+22.08	217326.41	192291.40			38.00'	40.00'	22.08'	60°18'41"	RIGHT
		PT	30+40.00	217322.80	192269.62							
						S 80°35'20" W	16.70'					
		PI	30+56.70	217320.07	192253.14							
						S 0°24'40" E	26.06'					
		PI	30+82.76	217294.01	192253.33							
						N 85°36'16" E	8.66'					
		POE	30+91.42	217294.67	192261.96							

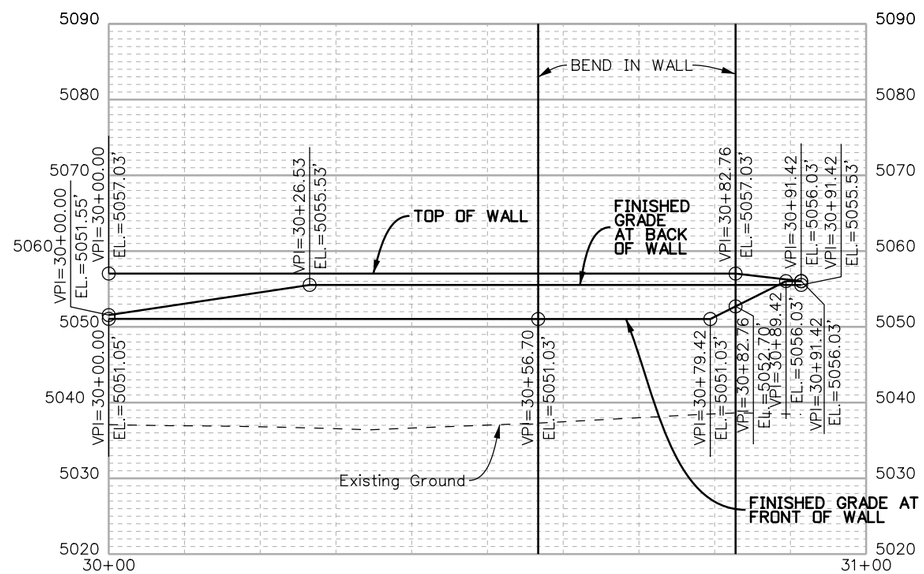

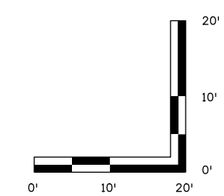

Print Date: 10/21/2021	Sheet Revisions	Colorado Department of Transportation	As Constructed
Drawing File Name: 23019Walls_Plan8.dgn	Date: / Comments / Init.	1050 Lee Hill Road, Boulder, CO 80302, Phone: 303-546-5676, FAX: 303-444-0751	No Revisions:
Horiz. Scale: 1:20 Vert. Scale: As Noted		Region 4 ALG	Revised:
Unit Information Unit Leader Initials			Void:
MULLER ENGINEERING COMPANY			

NORTHEAST LOWER WALL GENERAL PLAN - ELEVATION

Designer:	EKS	Structure Numbers	
Detailer:	DLD		
Sheet Subset:	WALL	Subset Sheets:	WF10

Project No./Code: NHPP 0253-275

23019

Sheet Number 22

mullerpw01app02$ 6:39:09 PM \\mullerpw01app02\ICS_pdf_work_dir\13073\6342_10\23019Walls_Plan8.dgn
10/21/2021 iplotdrvr.pit MEC-Standard.tbl

RFC SUBMITTAL - NOT FOR CONSTRUCTION - OCTOBER 25, 2021

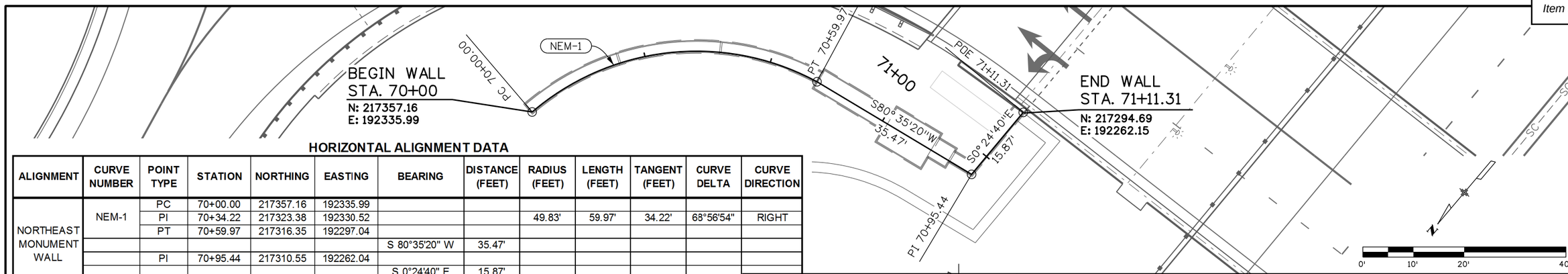

HORIZONTAL ALIGNMENT DATA

ALIGNMENT	CURVE NUMBER	POINT TYPE	STATION	NORTHING	EASTING	BEARING	DISTANCE (FEET)	RADIUS (FEET)	LENGTH (FEET)	TANGENT (FEET)	CURVE DELTA	CURVE DIRECTION
NORTHEAST MONUMENT WALL	NEM-1	PC	70+00.00	217357.16	192335.99							
		PI	70+34.22	217323.38	192330.52			49.83'	59.97'	34.22'	68°56'54"	RIGHT
		PT	70+59.97	217316.35	192297.04							
						S 80°35'20" W	35.47'					
		PI	70+95.44	217310.55	192262.04							
						S 0°24'40" E	15.87'					
		POE	71+11.31	217294.69	192262.15							

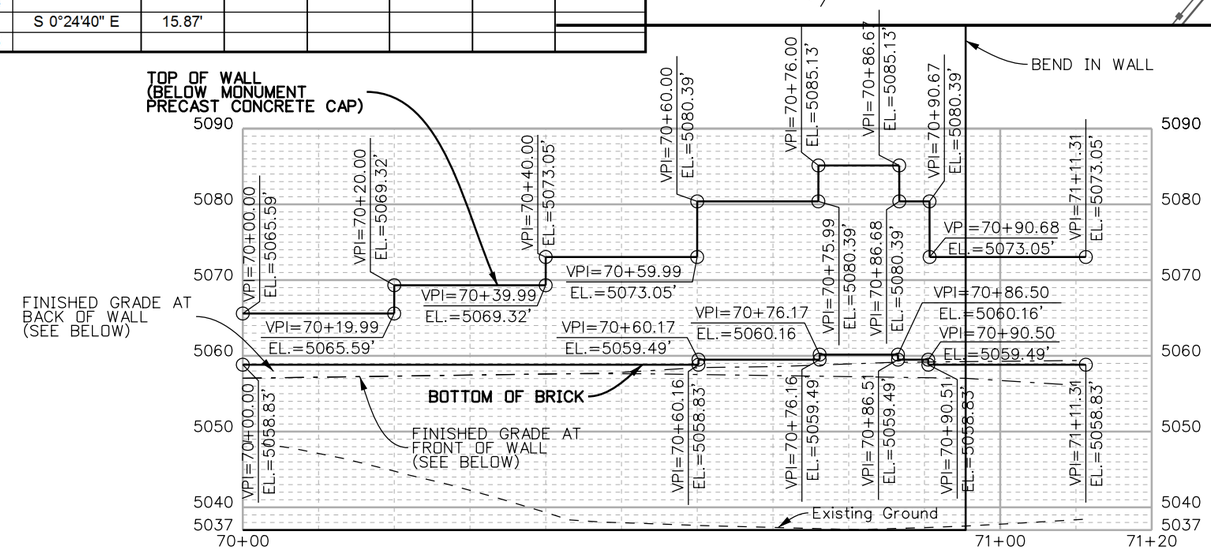

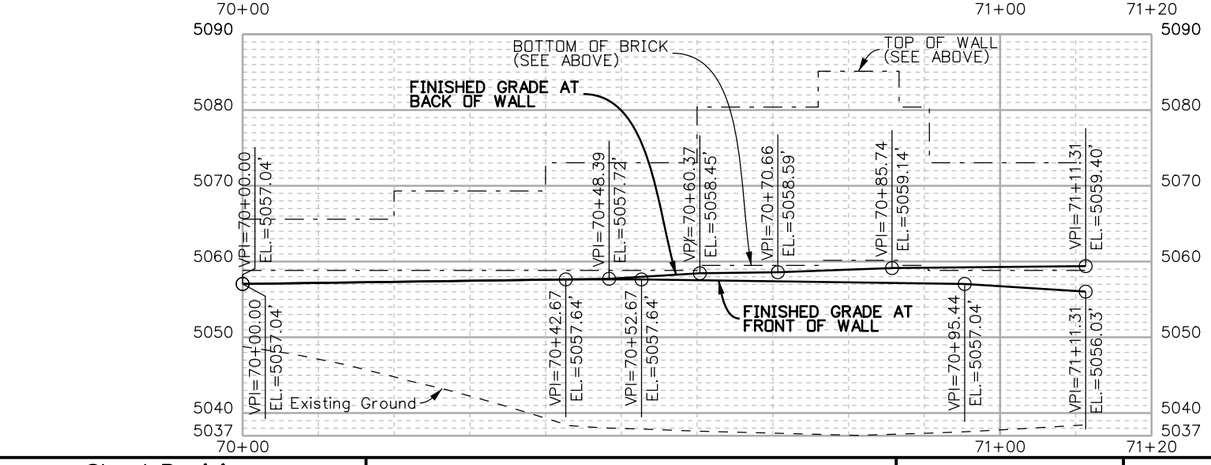

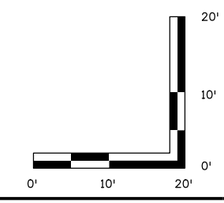

Print Date: 10/21/2021	Sheet Revisions	Colorado Department of Transportation	As Constructed
Drawing File Name: 23019Walls_Plan9.dgn	Date: / Comments / Init.	1050 Lee Hill Road, Boulder, CO 80302, Phone: 303-546-5676, FAX: 303-444-0751	No Revisions:
Horiz. Scale: 1:20 Vert. Scale: As Noted		Region 4 ALG	Revised:
Unit Information Unit Leader Initials			Void:
MULLER ENGINEERING COMPANY			

NORTHEAST MONUMENT WALL
GENERAL PLAN - ELEVATION

Designer:	EKS	Structure Numbers	
Detailer:	DLD		
Sheet Subset:	WALL	Subset Sheets:	WF11

Project No./Code: NHPP 0253-275
23019
Sheet Number 23

RFC SUBMITTAL - NOT FOR CONSTRUCTION - OCTOBER 25, 2021

muller pw01app02$ 6:34:17 PM \\mullerpw01app02\ICS_pdf_work_dir\13073\6342_9\23019Walls_Plan9.dgn
10/21/2021 iplotdrvm.plt MEC-Standard.tbl

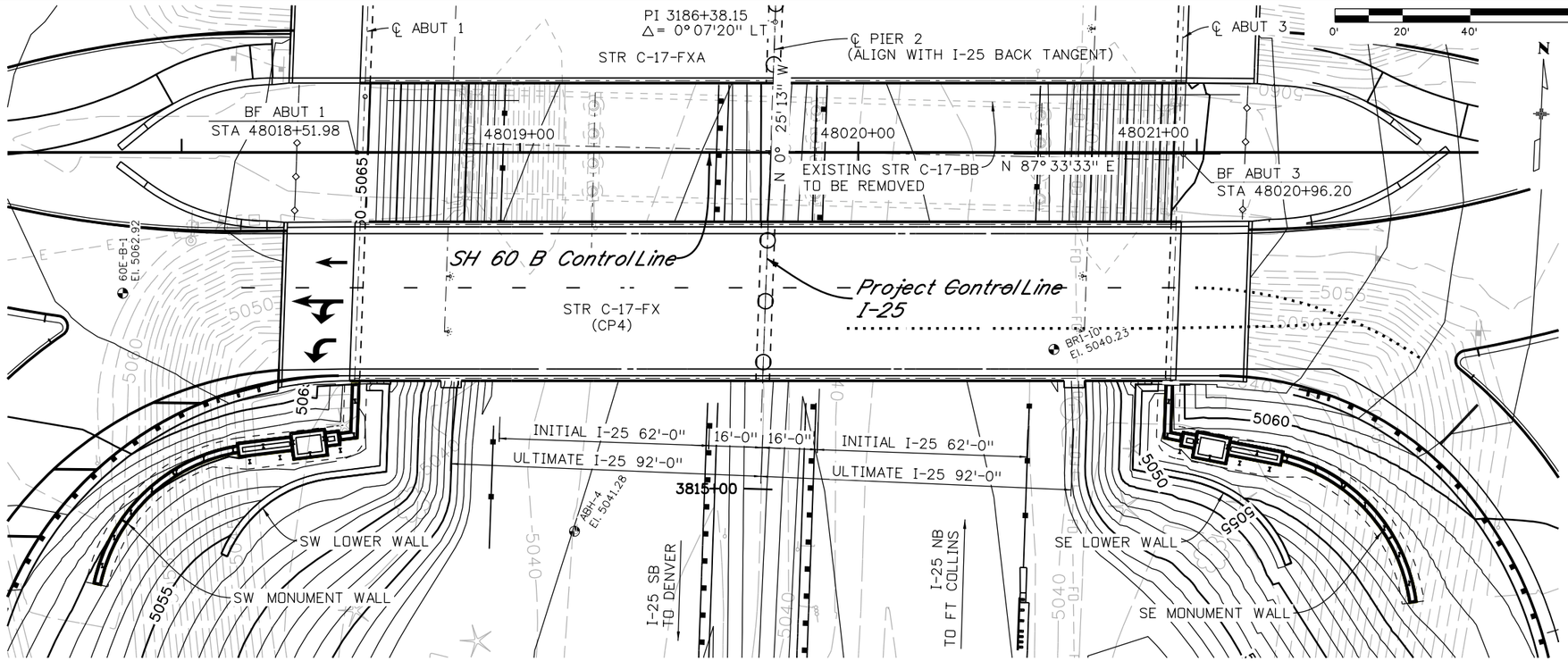

PLAN

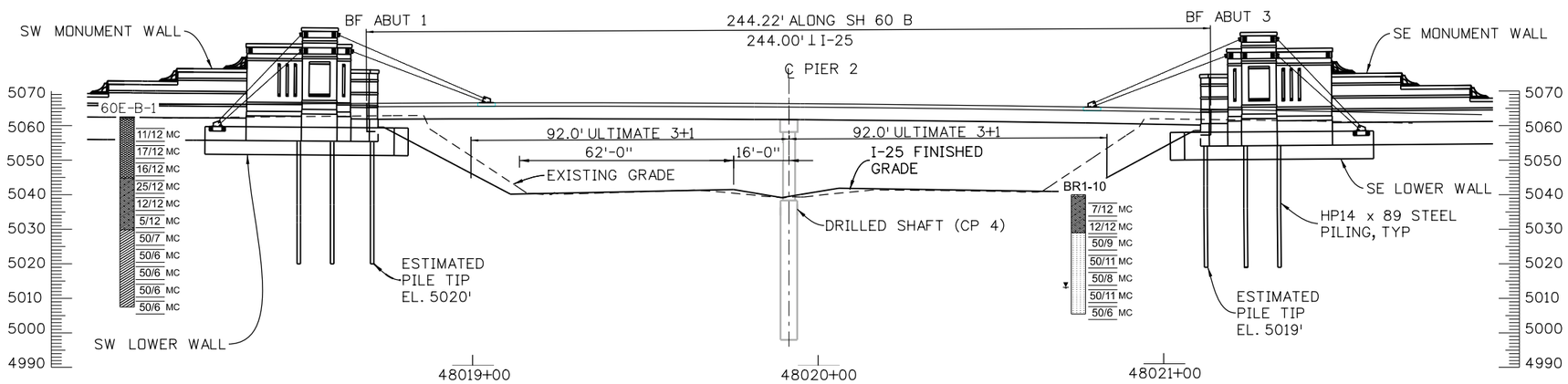

LONGITUDINAL SECTION

TEMPORARY CONSTRUCTION NAME	STRUCTURE NUMBER ***
SW MONUMENT WALL	R025A252234LRA
SW LOWER WALL	R025A252231LRA

TEMPORARY CONSTRUCTION NAME	STRUCTURE NUMBER **
SE MONUMENT WALL	R025A252239RRA
SE LOWER WALL	R025A252240RRA

SUMMARY OF TEST RESULTS

Sample ID	Depth (ft)	Liquid Limit	Plasticity Index	%< #200 Sieve	Classification USCS	Classification AASHTO	Water Content (%)	Dry Density (%)	Sulfate (%)
60E-B-1	5			65			19.3	106.1	0.04
60E-B-1	10	34	19				17.8	109.6	
60E-B-1	15			81			25.4	99.3	0.16
60E-B-1	20						19.2	109.2	
60E-B-1	25			88			23.0	99.8	0.03
60E-B-1	30	31	17				25.6	95.1	
60E-B-1	35			42			14.4	116.9	0.00
60E-B-1	40	36	21				15.4	118.1	
60E-B-1	45			98			19.7	109.0	
60E-B-1	50						15.2	118.2	0.18
60E-B-1	55			50			15.2	118.2	
BR1-10	1-10	39	26	88	CL	A-6 (22)			0.13
BR1-10	4						20.1	98.2	
BR1-10	9			85			18.2	108.6	
BR1-10	14						15.0	116.9	
BR1-10	19						15.3	117.3	
BR1-10	24						14.9	117.5	
BR1-10	29						16.9	114.6	
BR1-10	34						13.7	120.1	

LEGEND

LITHOLOGY

- Asphalt Pavement
- Fill - Aggregate Base Course
- Fill - CLAY, sandy
- Fill - SAND, clayey to silty
- TOPSOIL
- Native - SAND, silty
- Concrete Pavement
- Fill - SAND, gravelly
- Native - SAND, gravelly
- Native - CLAY, sandy
- Bedrock - CLAYSTONE
- Bedrock - SANDSTONE
- Bedrock - CLAYSTONE, interbedded SANDSTONE

SAMPLE TYPE

- Auger Cuttings
- MODIFIED CALIFORNIA SAMPLER 2.5" O.D AND 2" I.D. WITH BRASS LINERS INCLUDED

Fines Content indicates amount of material, by weight, passing the US No 200 Sieve (%)

15/12 Indicates 15 blows of a 140 pound hammer falling 30 inches was required to drive the sampler 12 inches.

50/11 Indicates 50 blows of a 140 pound hammer falling 30 inches was required to drive the sampler 11 Inches.

GROUND WATER LEVEL 1ST DEPTH

BORING ID NOTED AT THE TOP OF LOG
SEE INDIVIDUAL LOG SHEETS FOR MORE DETAIL

INITIALS	DESIGN	DATE	DETAIL	DATE	QUANTITY	DATE
By	DH	11/20	DG	11/20	DMA	08/21
Checked By	RL	11/20	RL	11/20	AAD	08/21

FOR ENGINEERING GEOLOGY ONLY

Print Date: 8/17/2021
Drawing File Name: 23019_CP5_WF12_GEO_South.dgn
Horiz. Scale: 1:40 Vert. Scale: As Noted
Staff Bridge Branch: Unit 0222 Unit leader: AAH
Sub-consultant RockSol Consulting Group, Inc.

Sheet Revisions		
Date:	Comments	Init.

Colorado Department of Transportation
1050 Lee Hill Road
Boulder, CO 80302
Phone: 303-546-5676
FAX: 303-444-0751
Region 4 ALG

As Constructed
No Revisions:
Revised:
Void:

I-25 EXPR. LANES SEG 5&6 CP5
ENGINEERING GEOLOGY - SOUTH
Designer: D.HUNT/D.ADAMS
Detailer: D. GONZALES
Sheet Subset: WALL
Structure Numbers **, ***
Subset Sheets: WF12

Project No./Code
NHPP 0253-275
23019
Sheet Number 24

RFC SUBMITTAL - NOT FOR CONSTRUCTION - OCTOBER 25, 2021

adams 10:43:04 AM pw:\\mullereng-pw.bentley.com:mullereng-pw-01\Documents\2012 Projects\12-003 I-25 SH 66 to SH 402\CP5\Bridge\RockSol\Drawings\23019_CP5_WF12_GEO_South.dgn

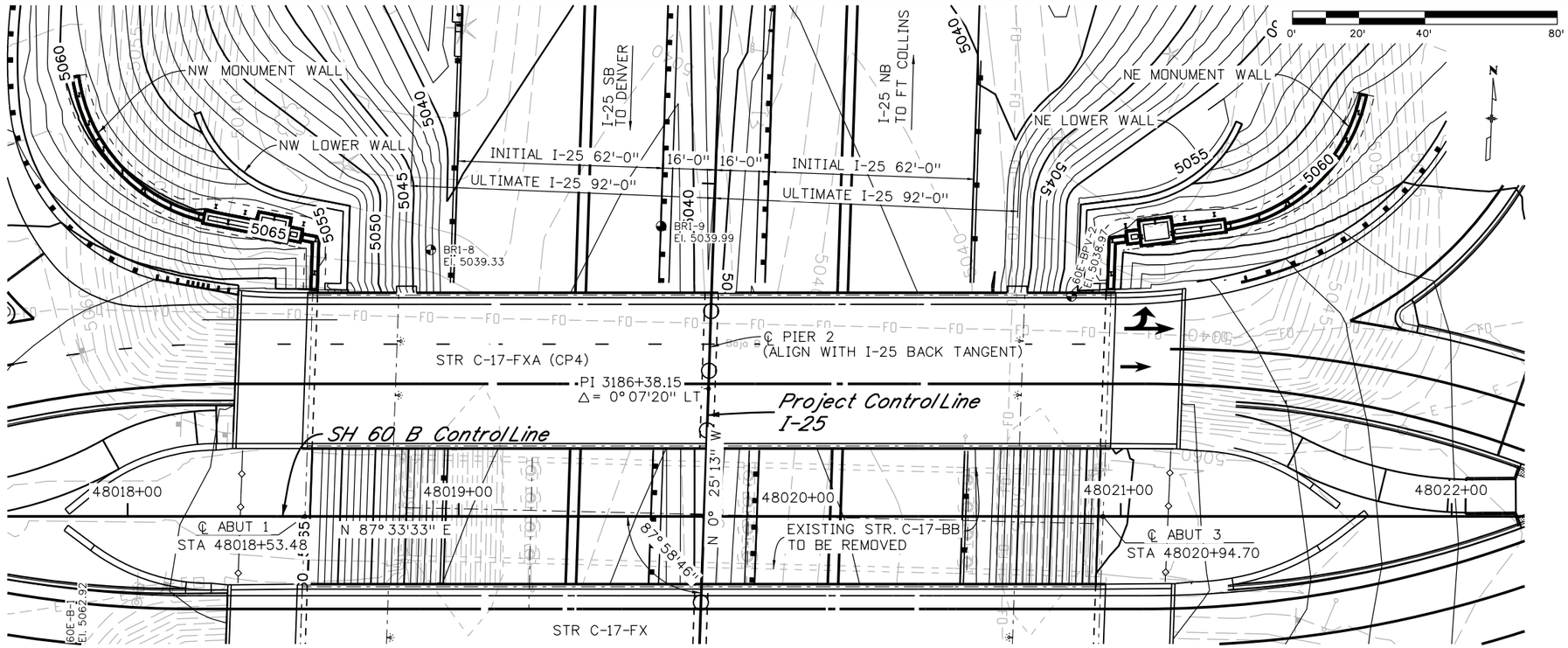

PLAN

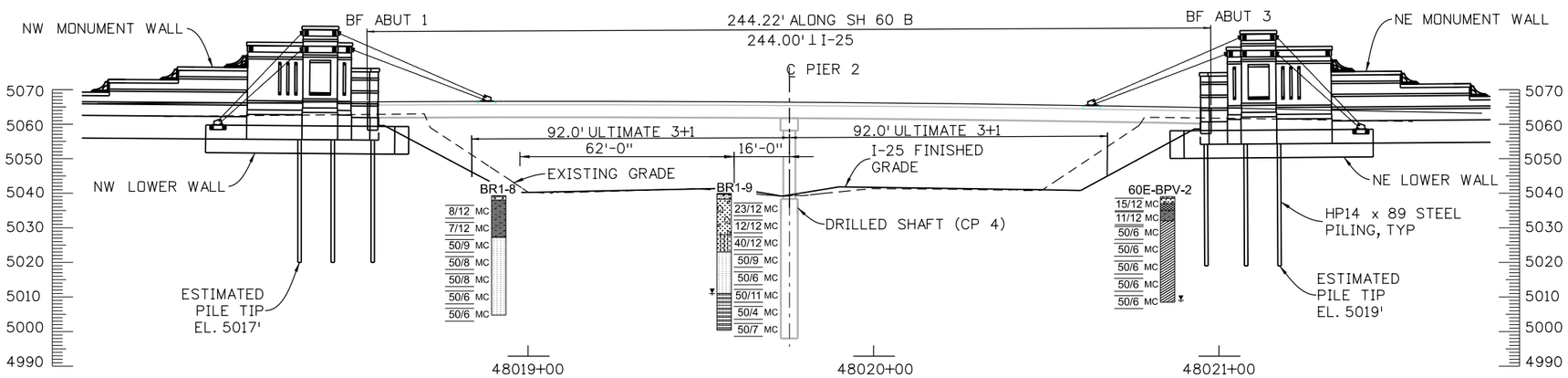

LONGITUDINAL SECTION

TEMPORARY CONSTRUCTION NAME	STRUCTURE NUMBER ***
NW MONUMENT WALL	R025A252262LRA
NW LOWER WALL	R025A252263LRA

TEMPORARY CONSTRUCTION NAME	STRUCTURE NUMBER **
NE MONUMENT WALL	R025A252262RRA
NE LOWER WALL	R025A252261RRA

SUMMARY OF TEST RESULTS

Sample ID	Depth (ft)	Liquid Limit	Plasticity Index	%< #200 Sieve	Classification USCS	Classification AASHTO	Water Content (%)	Dry Density (%)	Sulfate (%)
60E-BPV-2	0-5	28	14	42	SC	A-6 (2)			0.00
60E-BPV-2	2						20.0	106.4	
60E-BPV-2	5						24.2	97.0	
60E-BPV-2	10						14.8	116.3	
60E-BPV-2	15	35	20	65	CL	A-6 (10)	14.0	106.8	
60E-BPV-2	20						16.1	114.0	0.00
60E-BPV-2	25						16.4	110.9	
60E-BPV-2	30						18.6	106.5	
BR1-8	1-7	37	17	80	CL	A-6 (13)			0.00
BR1-8	4						18.4	101.2	
BR1-8	9						24.3	97.0	
BR1-8	14						18.3	112.0	
BR1-8	19						17.0	114.5	0.00
BR1-8	24						19.1	109.0	
BR1-8	29						16.0	112.0	
BR1-8	34						16.5	115.8	
BR1-9	2-10	26	9	41	SC	A-4 (1)			0.04
BR1-9	4						9.5	121.5	
BR1-9	9			25			7.2	117.8	
BR1-9	14						16.2	115.9	
BR1-9	19						15.7	115.9	
BR1-9	24						16.6	114.2	0.00
BR1-9	29						15.5	116.4	
BR1-9	34			69			15.5	117.4	
BR1-9	39						16.2	116.3	

LEGEND

LITHOLOGY

- Asphalt Pavement
- Fill - Aggregate Base Course
- Fill - CLAY, sandy
- Fill - SAND, clayey to silty
- TOPSOIL
- Native - SAND, silty
- Concrete Pavement
- Fill - SAND, gravelly
- Native - SAND, gravelly
- Native - CLAY, sandy
- Bedrock - CLAYSTONE
- Bedrock - SANDSTONE
- Bedrock - CLAYSTONE, interbedded SANDSTONE

SAMPLE TYPE

- Auger Cuttings
- MODIFIED CALIFORNIA SAMPLER 2.5" O.D AND 2" I.D. WITH BRASS LINERS INCLUDED

Fines Content indicates amount of material, by weight, passing the US No 200 Sieve (%)

15/12 Indicates 15 blows of a 140 pound hammer falling 30 inches was required to drive the sampler 12 inches.

50/11 Indicates 50 blows of a 140 pound hammer falling 30 inches was required to drive the sampler 11 Inches.

GROUND WATER LEVEL 1ST DEPTH

BORING ID NOTED AT THE TOP OF LOG
SEE INDIVIDUAL LOG SHEETS FOR MORE DETAIL

INITIALS	DESIGN	DATE	DETAIL	DATE	QUANTITY	DATE
By	DH	8/20	DG	8/20	DMA	08/21
Checked By	RL	8/20	RL	8/20	AAD	08/21

FOR ENGINEERING GEOLOGY ONLY

Print Date: 8/17/2021
Drawing File Name: 23019_CP5_WF13_GEO_North.DGN.dgn
Horiz. Scale: 1:39.999 Vert. Scale: As Noted
Staff Branch/Branch: Unit 0222 Unit Leader: Initials
Sub-consultant: RockSol Consulting Group, Inc.

Sheet Revisions		
Date:	Comments	Init.

Colorado Department of Transportation
1050 Lee Hill Road
Boulder, CO 80302
Phone: 303-546-5676
FAX: 303-444-0751
Region 4 ALG

As Constructed
No Revisions:
Revised:
Void:

I-25 EXPR. LANES SEG 5&6 CP5
ENGINEERING GEOLOGY - NORTH
Designer: D.HUNT/D.ADAMS
Detailer: D. GONZALES
Sheet Subset: WALL
Structure Numbers: ** ***
Subset Sheets: WF13

Project No./Code
NHPP 0253-275
23019
Sheet Number 25

RFC SUBMITTAL - NOT FOR CONSTRUCTION - OCTOBER 25, 2021

adams 10:46:00 AM pw:\\mullereng-pw.bentley.com:mullereng-pw-01\Documents\2012 Projects\12-003 I-25 SH 66 to SH 402\CP5\Bridge\RockSol\Drawings\23019_CP5_WF13_GEO_North.DGN

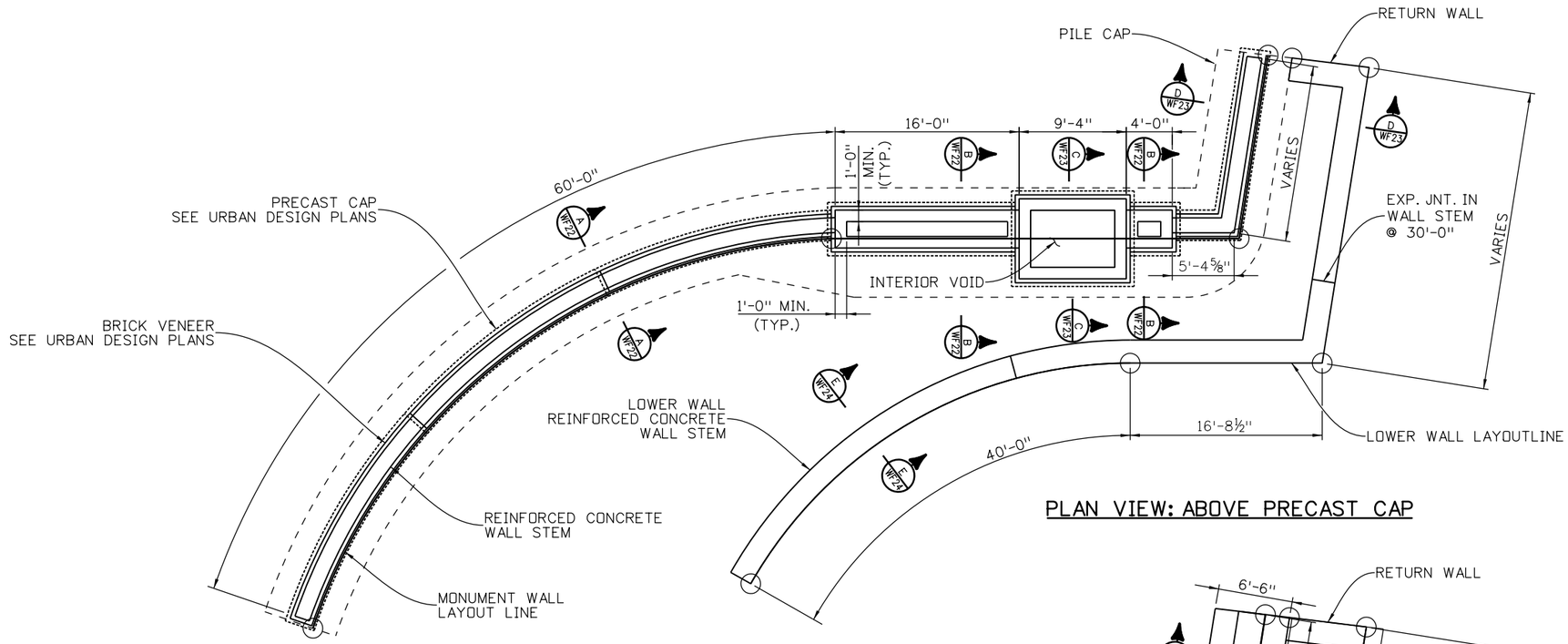

PLAN VIEW: ABOVE PRECAST CAP

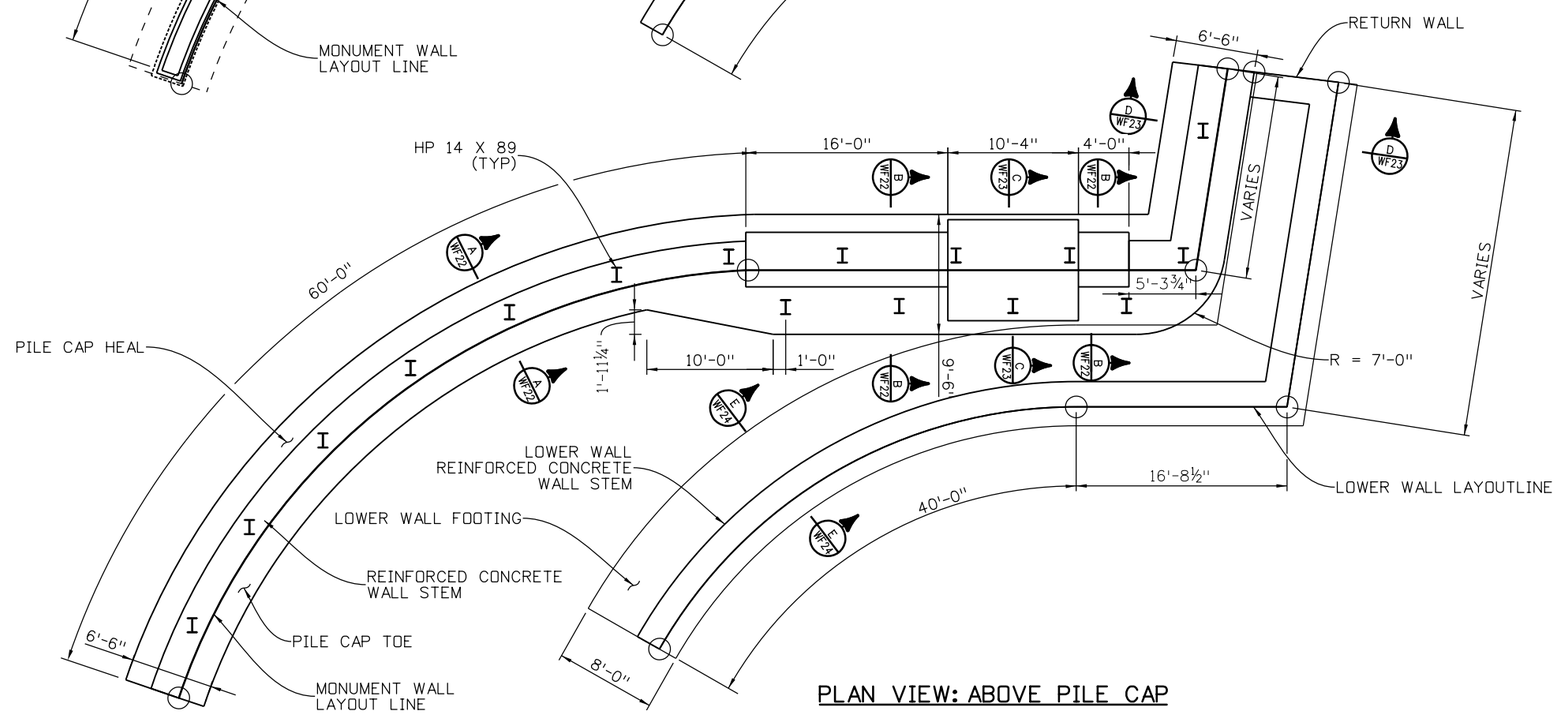

PLAN VIEW: ABOVE PILE CAP

TEMPORARY CONSTRUCTION NAME	STRUCTURE NUMBER **
SW MONUMENT WALL	R025A252234LRA
NW MONUMENT WALL	R025A252262LRA
SE MONUMENT WALL	R025A252239RRA
NE MONUMENT WALL	R025A252262RRA
SW LOWER WALL	R025A252231LRA
NW LOWER WALL	R025A252263LRA
SE LOWER WALL	R025A252240RRA
NE LOWER WALL	R025A252261RRA

RFC SUBMITTAL - NOT FOR CONSTRUCTION - OCTOBER 25, 2021

Design				Detail				Quantities			
	INITIAL	DATE		INITIAL	DATE		INITIAL	DATE		INITIAL	DATE
Designed By	DMA	8/21	Detailed By	DMA	8/21	Quantities By	DMA	8/21			
Checked By	AAD	10/21	Checked By	MRM	8/21	Checked By	AAD	8/21			

adams 4:36:33 PM pw:\\mulleren-pw.bentley.com:mulleren-pw-01\Documents\2012 Projects\12-003 I-25 SH 66 to SH 402\CP5\Bridge\RockSol\Drawings\23019_CP5_WF14_Construction Layout.dgn

10/6/2021 CDOT-DefaultPrinter_ORD.pltcfg CDOT-PenTable.tbl

Print Date: 10/6/2021
File Name: 23019_CP5_WF14_Construction Layout.dgn
Horiz. Scale: 1:1 Vert. Scale: As Noted
Staff Bridge Branch: Unit 0222 Unit Leader: AAH
Sub-consultant RockSol Consulting Group, Inc.

Sheet Revisions		
Date:	Comments	Init.

Colorado Department of Transportation
1050 Lee Hill Road
Boulder, CO 80302
Phone: 303-546-5676
FAX: 303-444-0751
Region 4 ALG

As Constructed
No Revisions:
Revised:
Void:

I-25 EXPR. LANES SEG 5&6 CP5
CONSTRUCTION LAYOUT

Designer: D. ADAMS
Detailer: D. ADAMS
Sheet Subset: WALL
Structure Numbers **
Subset Sheets: WF14

Project No./Code
NHPP 0253-275
23019
Sheet Number 2

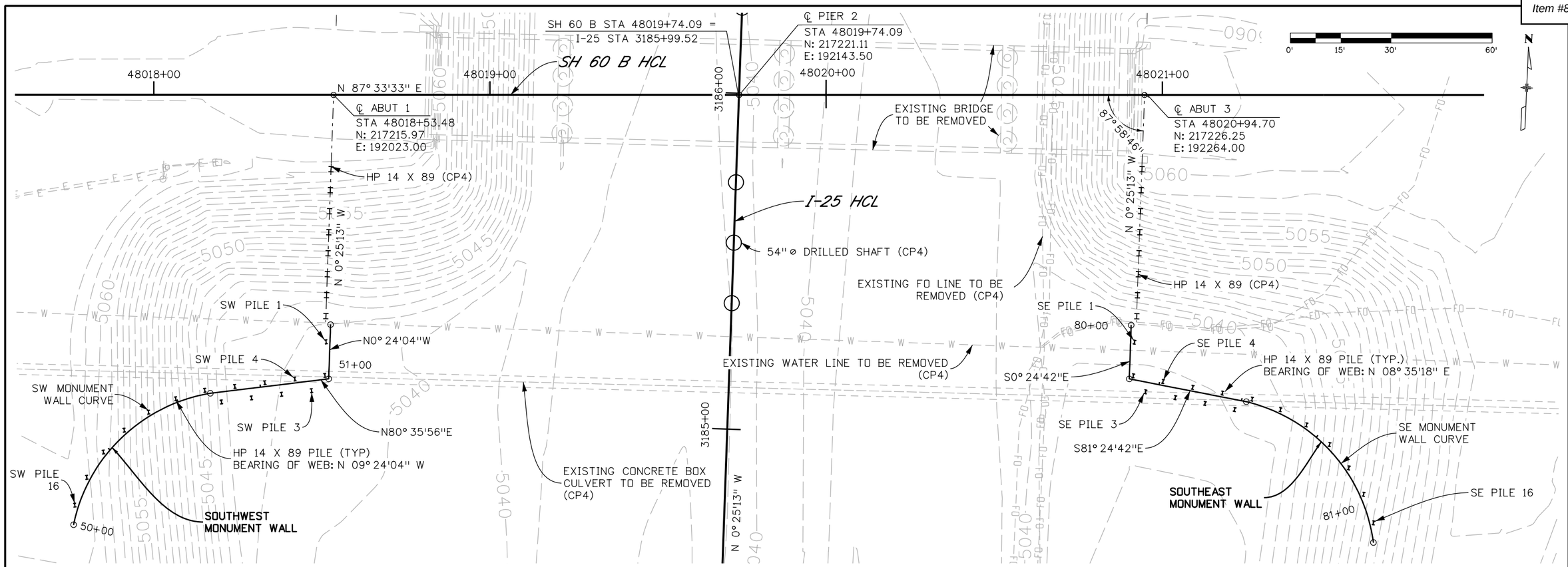

SW MONUMENT WALL CURVE
Δc = 68° 56'54" RT
Rc = 49.83'
L = 59.97'
Tc = 34.22'

Southwest Monument Wall Piles			
Pile #	Description	Easting	Northing
1	Abutment	192023.90	217142.48
2	Corner	192023.97	217132.48
3		192020.19	217127.80
4		192015.10	217131.00
5		192011.31	217126.32
6		192006.22	217129.53
7		192002.43	217124.85
8		191997.34	217128.05
9		191993.57	217123.29
10	Start Curve	191988.47	217126.50
11		191979.94	217123.64
12		191972.05	217119.31
13		191965.04	217113.67
14		191959.13	217106.89
15		191954.50	217099.16
16	End Curve	191951.30	217090.75

FOUNDATION LAYOUT - SOUTH

TEMPORARY CONSTRUCTION NAME	STRUCTURE NUMBER **
SW MONUMENT WALL	R025A252234LRA
SE MONUMENT WALL	R025A252239RRA

Southeast Monument Wall Piles			
Pile #	Description	Easting	Northing
1	Abutment	192264.15	217152.64
2	Corner	192264.22	217142.64
3		192268.08	217138.01
4		192273.12	217141.29
5		192276.97	217136.66
6		192282.02	217139.94
7		192285.87	217135.31
8		192290.92	217138.59
9		192294.76	217133.89
10	Start Curve	192299.81	217137.17
11		192308.38	217134.42
12		192316.33	217130.21
13		192323.42	217124.67
14		192329.43	217117.97
15		192334.16	217110.31
16	End Curve	192337.48	217101.95

SE MONUMENT WALL CURVE
Δc = 68° 56'54" RT
Rc = 49.83'
L = 59.97'
Tc = 34.22'

Know what's **below**
Call before you dig.

Design	INITIAL	DATE	Detail	INITIAL	DATE	Quantities	INITIAL	DATE
Designed By	DMA	8/21	Detailed By	DG	8/21	Quantities By	DMA	8/21
Checked By	AAD	10/21	Checked By	MRM	8/21	Checked By	AAD	8/21

Print Date: 10/6/2021
File Name: 23019_CP5_WF15_Foundation_Layout_South.dgn
Horiz. Scale: 1:30 Vert. Scale: As Noted
Staff Bridge Branch: Unit 0222 Unit Leader: AAH
Sub-consultant RockSol Consulting Group, Inc.

Sheet Revisions		
Date:	Comments	Init.

Colorado Department of Transportation
1050 Lee Hill Road
Boulder, CO 80302
Phone: 303-546-5676
FAX: 303-444-0751
Region 4 ALG

As Constructed
No Revisions:
Revised:
Void:

I-25 EXPR. LANES SEG 5&6 CP5
FOUNDATION LAYOUT - SOUTH

Designer:	D. ADAMS	Structure Numbers	**
Detailer:	D. GONZALES		
Sheet Subset:	WALL	Subset Sheets:	WF15

Project No./Code
NHPP 0253-275
23019
Sheet Number 2

RFC SUBMITTAL - NOT FOR CONSTRUCTION - OCTOBER 25, 2021

adams 4:39:51 PM pw:\\mulleneng-pw.bentley.com:mulleneng-pw-01\Documents\2012 Projects\12-003 I-25 SH 66 to SH 402\CP5\Bridge\RockSol\Drawings\23019_CP5_WF15_Foundation_Layout_South.dgn
10/6/2021 CDOT-DefaultPrinter_ORD.pltcfg CDOT-PenTable.tbl

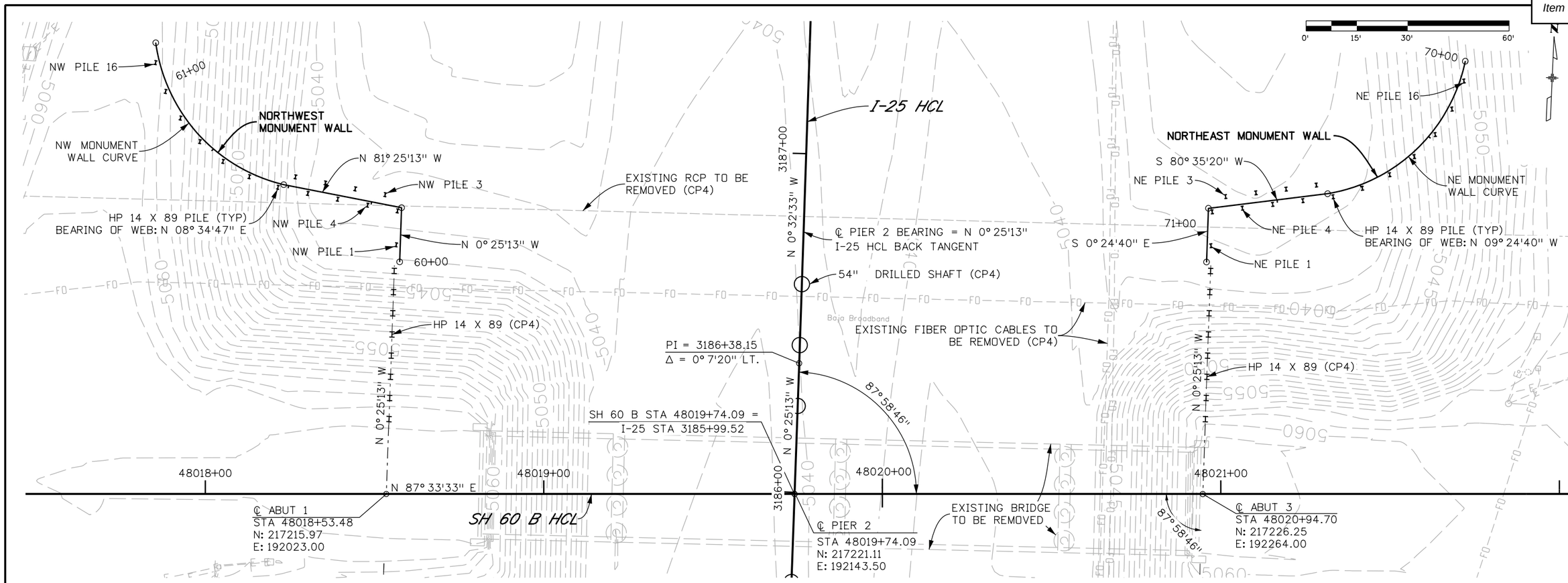

FOUNDATION LAYOUT - NORTH

NW MONUMENT WALL CURVE:
Δc = 68° 56'54" RT
Rc = 49.83'
L = 59.97'
Tc = 34.22'

Northwest Monument Wall Piles			
Pile #	Description	Easting	Northing
1	Abutment	192022.83	217289.59
2	Corner	192022.75	217299.59
3		192018.90	217304.22
4		192013.85	217300.94
5		192010.00	217305.57
6		192004.96	217302.28
7		192001.10	217306.91
8		191996.06	217303.63
9		191992.22	217308.34
10	Start Curve	191987.17	217305.06
11		191978.56	217307.80
12		191970.64	217312.01
13		191963.55	217317.55
14		191957.54	217324.25
15		191952.81	217331.91
16	End Curve	191949.49	217340.27

TEMPORARY CONSTRUCTION NAME	STRUCTURE NUMBER **
NW MONUMENT WALL	R025A252262LRA
NE MONUMENT WALL	R025A252262RRA

Northeast Monument Wall Piles			
Pile #	Description	Easting	Northing
1	Abutment	192263.28	217299.59
2	Corner	192263.21	217309.59
3		192267.00	217314.27
4		192272.09	217311.07
5		192275.87	217315.75
6		192280.97	217312.54
7		192284.75	217317.23
8		192289.84	217314.02
9		192293.62	217318.78
10	Start Curve	192298.71	217315.57
11		192307.24	217318.44
12		192315.13	217322.76
13		192322.15	217328.41
14		192328.05	217335.20
15		192332.68	217342.92
16	End Curve	192335.87	217351.33

NE MONUMENT WALL CURVE:
Δc = 68° 56'54" RT
Rc = 49.83'
L = 59.97'
Tc = 34.22'

811 Know what's below Call before you dig.

Print Date: 10/6/2021
File Name: 23019_CP5_WF16_Foundation_Layout_North.dgn
Horiz. Scale: 1:30 Vert. Scale: As Noted
Staff Bridge Branch: Unit 0222 Unit Leader: AAH
Sub-consultant RockSol Consulting Group, Inc.

Sheet Revisions		
Date:	Comments	Init.

Colorado Department of Transportation
1050 Lee Hill Road
Boulder, CO 80302
Phone: 303-546-5676
FAX: 303-444-0751
Region 4 ALG

As Constructed
No Revisions:
Revised:
Void:

I-25 EXPR. LANES SEG 5&6 CP5
FOUNDATION LAYOUT - NORTH

Designer: D. ADAMS
Detailer: D. GONZALES
Sheet Subset: WALL
Structure Numbers **
Subset Sheets: WF16

Project No./Code
NHPP 0253-275
23019
Sheet Number 2

Design			Detail			Quantities		
	INITIAL	DATE		INITIAL	DATE		INITIAL	DATE
Designed By	DMA	8/21	Detailed By	DG	8/21	Quantities By	DMA	8/21
Checked By	AAD	10/21	Checked By	MRM	8/21	Checked By	AAD	8/21

CDOT-PenTable.tbl
10/6/2021 CDOT-DefaultPrinter_ORD.pltcfg
adams 4:43:12 PM pw:\\mullereng-pw.bentley.com:mullereng-pw-01\Documents\2012 Projects\12-003 I-25 SH 66 to SH 402\CP5\Bridge\RockSol\Drawings\23019_CP5_WF16_Foundation_Layout_North.dgn

RFC SUBMITTAL - NOT FOR CONSTRUCTION - OCTOBER 25, 2021

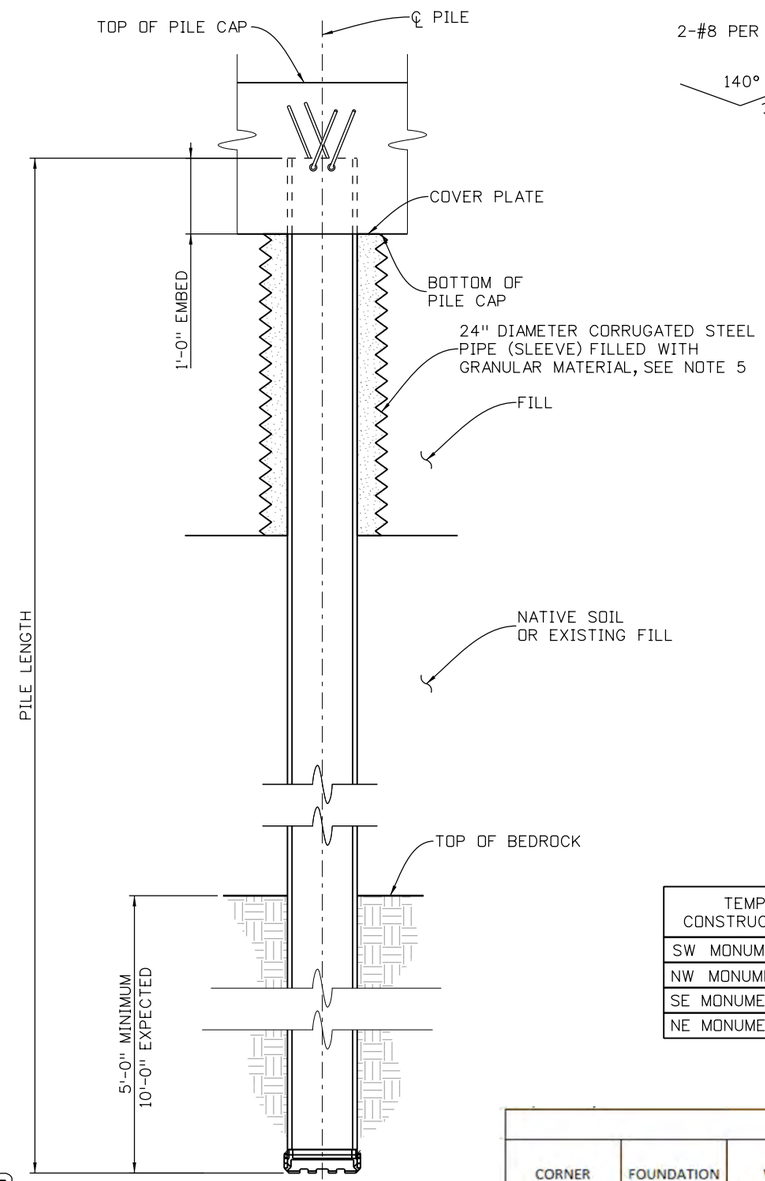

PILING DETAIL

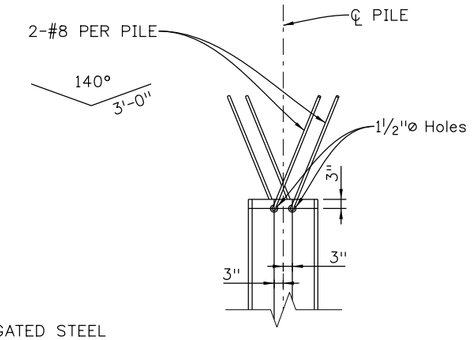

PILE TOP DETAIL

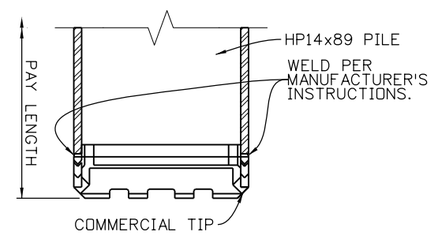

PILE TIP DETAIL

NOTES:

1. COMPETENT BEDROCK ELEVATIONS WERE ESTIMATED IN ACCORDANCE WITH GENERALLY ACCEPTED GEOTECHNICAL ENGINEERING PRACTICE. THE ELEVATION AT WHICH COMPETENT BEDROCK EXISTS MAY NOT BECOME EVIDENT UNTIL PILES ARE DRIVEN. THE CONTRACTOR SHALL COORDINATE ON-SITE OBSERVATION OF THE DRIVING AND BEARING STRATA BY A REPRESENTATIVE OF THE GEOTECHNICAL ENGINEER WHO WILL BE PROVIDED TO DETERMINE THE EXACT ELEVATION AT WHICH THE COMPETENT BEDROCK EXISTS.
2. PILE CAPACITIES ARE BASED ON THE GEOTECHNICAL MEMORANDUM TITLED: "FOUNDATION INVESTIGATION REPORT SH 60 BRIDGE STRUCTURES OVER I-25 SEGMENT 6, CONSTRUCTION PACKAGE 4" SEPTEMBER 17, 2020.
3. HP-PILE RESISTANCES ARE BASED UPON A RESISTANCE FACTOR OF 0.65 AND PRIOR TO ANY TIME DEPENDENT REDUCTIONS. REQUIRED RESISTANCE IS LARGER THAN LOADS TO ACCOUNT FOR FUTURE CORROSION DEDUCTIONS IN CROSS-SECTION.
4. ALL PILES SHALL BE DRIVEN VERTICALLY. PILES SHALL BE WITHIN 6 INCHES OF THE POSITION SHOWN IN THE PLANS AFTER DRIVING.
5. CORRUGATED STEEL PIPE SLEEVE REQUIRED IF COMPACTED BACKFILL 6 FT OR MORE IN DEPTH IS PLACED AFTER PILE IS DRIVEN. GRANULAR MATERIAL PLACED INSIDE METAL SLEEVES SHALL BE A SELF-CONSOLIDATING SAND OR AGGREGATE MATERIAL SUCH AS PEA GRAVEL. GRANULAR MATERIAL SHALL BE APPROVED BY THE ENGINEER PRIOR TO ORDERING MATERIAL. GRANULAR MATERIAL, CORRUGATED STEEL PIPE, AND COVER PLATE ARE INCIDENTAL TO 502 PAY ITEM STEEL PILING.
6. WAVE EQUATION ANALYSIS WAS NOT USED IN THE DESIGN; CDOT STANDARD SPECIFICATION 502.03 (A)3 DOES NOT APPLY.
7. PILE MUST BE DRIVEN TO THE REQUIRED FACTORED RESISTANCE FOR PDA AND PRODUCTION PILES VALUES AS SHOWN IN THE TABLE. THE CORROSIVE ENVIRONMENT WILL REDUCE PILE SECTION OVER TIME, AND THUS THE PILING IS DESIGNED AND DRIVEN TO TAKE SECTION LOSS INTO ACCOUNT WHILE STILL BEING ABLE TO RESIST THE SERVICE AND STRENGTH LIMIT STATE LOADS SHOWN IN THE TABLE.
8. PILE SHALL BE DRIVEN AS DESCRIBED IN NOTE 7, WHICH IS ESTIMATED TO OCCUR AT 10 FEET PENETRATION INTO BEDROCK. PILE TIP ELEVATIONS ARE ESTIMATED BASED ON A 10' EMBEDMENT INTO BEDROCK AS SHOWN IN THE PILING ELEVATION DETAIL.
9. ALL PILES DRIVEN PER CORNER MONUMENT SHALL BE ORIENTED IN SAME DIRECTION. ORIENTATION SHALL MATCH FOUNDATION LAYOUT.
10. PILE DRIVING ANALYZER (PDA) SHALL BE USED IN ACCORDANCE WITH CDOT STANDARD SPECIFICATION 502.05. PDA MONITORING SHALL BE PROVIDED BY THE CONTRACTOR. AT A MINIMUM, THE FIRST PILE AT EACH ABUTMENT DRIVEN SHALL BE ANALYZED. COSTS PAID UNDER ITEM 502-DYNAMIC PILE TEST. IF CP-4 BRIDGE ABUTMENT PDA IS CONDUCTED BEFORE CP-5 PILES ARE DRIVEN, CP-4 PDA MAY BE USED FOR CP-5 PILE DRIVING CRITERIA.
11. ALL PILES ARE HP 14X89 AND SHALL CONFORM TO AASHTO M270 WITH A MINIMUM YIELD STRENGTH OF 50 KSI.
12. WELD COMMERCIAL PILE TIP TO ALL PILING PER MANUFACTURER'S INSTRUCTIONS.

TEMPORARY CONSTRUCTION NAME	STRUCTURE NUMBER **
SW MONUMENT WALL	R025A252234LRA
NW MONUMENT WALL	R025A252262LRA
SE MONUMENT WALL	R025A252239RRA
NE MONUMENT WALL	R025A252262RRA

FOUNDATION DESIGN SUMMARY

CORNER MONUMENT	FOUNDATION TYPE	WEB ORIENTATION	MAX UNFACTORED LOAD, P (TONS)	MAX FACTORED LOAD, P_u (TONS)	FACTORED RESISTANCE, ϕR_n (TONS)	REQUIRED FACTORED RESISTANCE FOR PDA AND PRODUCTION PILES (TONS)	ESTIMATED BEDROCK ELEVATION	MIN PILE TIP ELEVATION	ESTIMATED PILE TIP ELEVATION	ACTUAL PILE TIP ELEVATION
SOUTHWEST	HP 14 x 89	N 9°24'04" W	160	190	300	340	5030	5025	5020	
SOUTHEAST	HP 14 x 89	N 8°35'18" E					5029	5024	5019	
NORTHWEST	HP 14 x 89	N 8°34'47" E					5027	5022	5017	
NORTHEAST	HP 14 x 89	N 9°24'40" W					5029	5024	5019	

Know what's **below**
Call before you dig.

Design			Detail			Quantities		
	INITIAL	DATE		INITIAL	DATE		INITIAL	DATE
Designed By	DMA	8/21	Detailed By	DG	8/21	Quantities By	DMA	8/21
Checked By	AAD	10/21	Checked By	MRM	8/21	Checked By	AAD	8/21

CDOT-PenTable.tbl

adams 4:45:24 PM pw:\\mulleneng-pw.bentley.com:mulleneng-pw-01\Documents\2012 Projects\12-003 I-25 SH 66 to SH 402\CP5\Bridge\RockSol\Drawings\23019_CP5_WF17_Piling Details.dgn

10/6/2021 CDOT-DefaultPrinter_ORD.pltcfg

Print Date: 10/6/2021
File Name: 23019_CP5_WF17_Piling Details.dgn
Horiz. Scale: 1:1 Vert. Scale: As Noted
Staff Bridge Branch: Unit 0222 Unit Leader: AAH
Sub-consultant RockSol Consulting Group, Inc.

Sheet Revisions		
Date:	Comments	Init.

Colorado Department of Transportation
1050 Lee Hill Road
Boulder, CO 80302
Phone: 303-546-5676
FAX: 303-444-0751
Region 4 ALG

As Constructed
No Revisions:
Revised:
Void:

I-25 EXPR. LANES SEG 5&6 CP5
PILING DETAILS

Designer: D. ADAMS
Detailer: D. GONZALES
Sheet Subset: WALL
Structure Numbers **
Subset Sheets: WF17

Project No./Code
NHPP 0253-275
23019
Sheet Number 2

RFC SUBMITTAL - NOT FOR CONSTRUCTION - OCTOBER 25, 2021

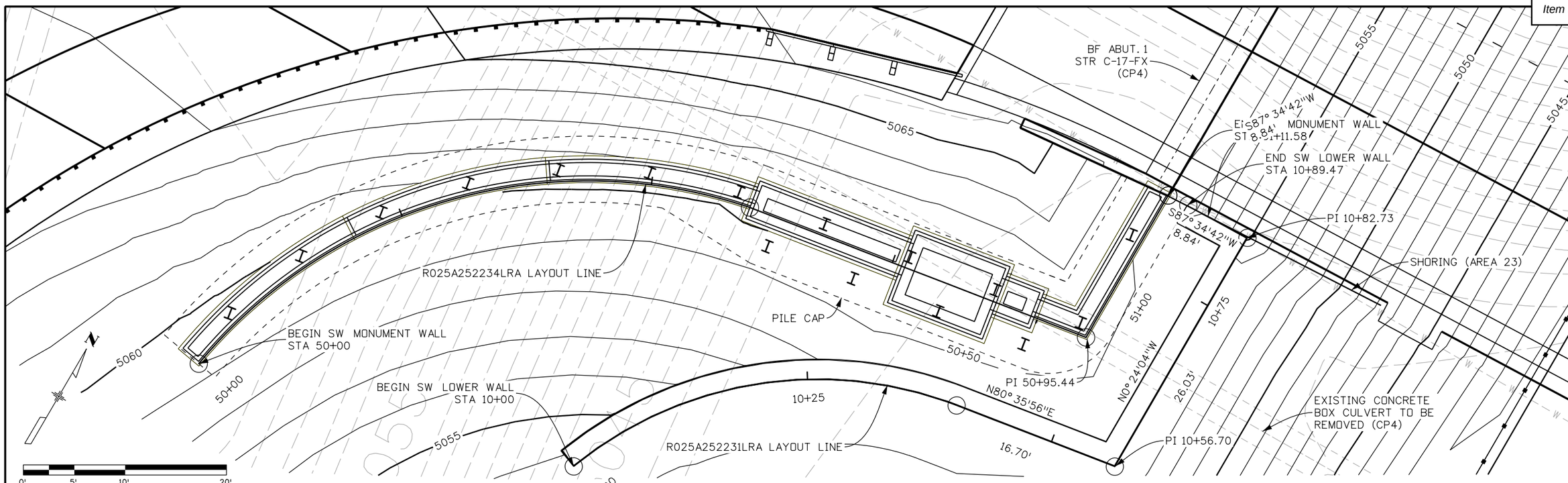

PLAN VIEW

PLAN

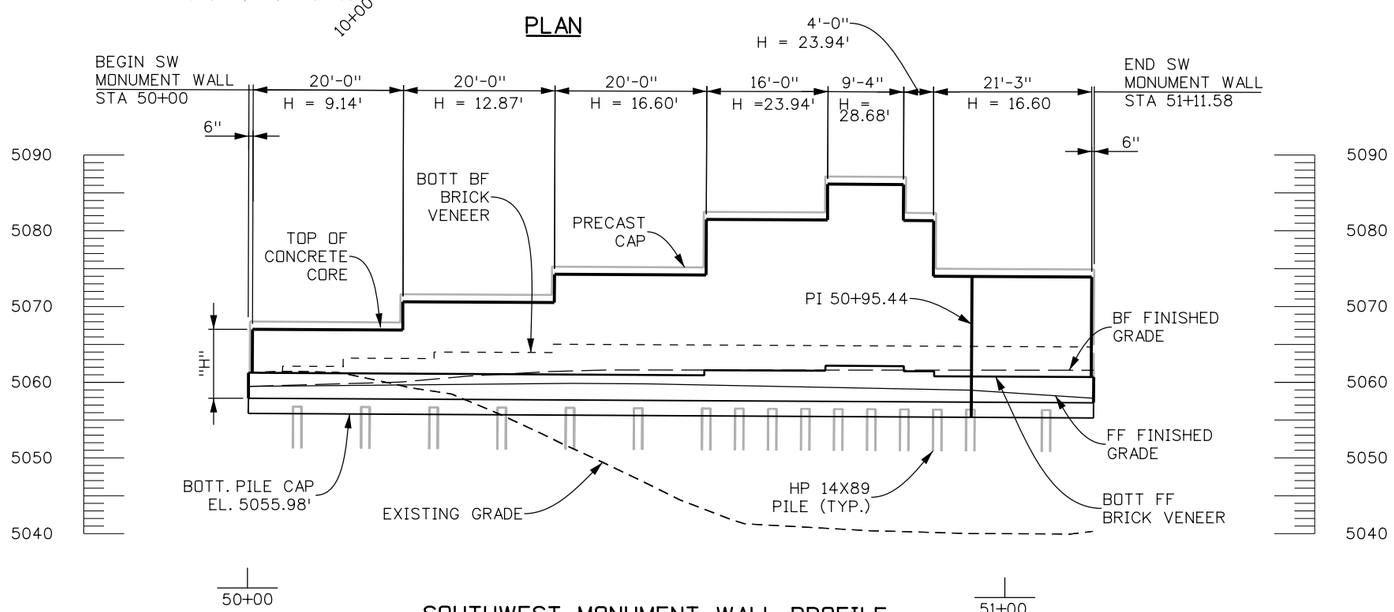

SOUTHWEST MONUMENT WALL PROFILE

TAKEN ALONG LAYOUT LINE

SOUTHWEST MONUMENT WALL			
STA	BOTT FF BRICK VENEER	BOTT BF BRICK VENEER	TOP OF CONCRETE
50+00.50	5061.36	5061.36	5067.12
50+04.50	5061.36	5062.27	5067.12
50+12.50	5061.36	5063.36	5067.12
50+20.50	5061.36	5063.36	5070.85
50+24.50	5061.36	5064.24	5070.85
50+40.50	5061.36	5065.34	5074.58
50+60.50	5062.03	5065.34	5081.92
50+76.50	5062.69	5065.34	5086.66
50+85.83	5062.03	5065.34	5081.92
50+89.83	5061.36	5065.34	5074.58
51+11.08	5061.36	5065.34	5074.58
NOTE: ALL ELEVATIONS TAKEN AT AHEAD STATION			

0' 10' 20' 40'

PROFILE VIEW

TEMPORARY CONSTRUCTION NAME	STRUCTURE NUMBER **
SW MONUMENT WALL	R025A252234LRA
SW LOWER WALL	R025A252231LRA

RFC SUBMITTAL - NOT FOR CONSTRUCTION - OCTOBER 25, 2021

Design	INITIAL	DATE	Detail	INITIAL	DATE	Quantities	INITIAL	DATE
Designed By	DMA	8/21	Detailed By	DG	8/21	Quantities By	DMA	8/21
Checked By	AAD	10/21	Checked By	MRM	8/21	Checked By	AAD	8/21

adams 4:50:12 PM pw:\\mulleng-pw.bentley.com:mulleng-pw-01\Documents\2012 Projects\12-003 I-25 SH 66 to SH 402\CP5\Bridge\RockSol\Drawings\23019_CP5_WF18_SW_Monument_Wall.dgn

10/6/2021 CDOT-DefaultPrinter_ORD.pltcfg CDOT-PenTable.tbl

Print Date: 10/6/2021
File Name: 23019_CP5_WF18_SW_Monument_Wall.dgn
Horiz. Scale: 1:10 Vert. Scale: As Noted
Staff Bridge Branch: Unit 0222 Unit Leader: AAH
Sub-consultant RockSol Consulting Group, Inc.

Sheet Revisions		
Date:	Comments	Init.

Colorado Department of Transportation
1050 Lee Hill Road
Boulder, CO 80302
Phone: 303-546-5676
FAX: 303-444-0751
Region 4 ALG

As Constructed
No Revisions:
Revised:
Void:

I-25 EXPR. LANES SEG 5&6 CP5
SW MONUMENT WALL
Designer: D. ADAMS
Detailer: D. GONZALES
Sheet Subset: WALL
Structure Numbers **
Subset Sheets: WF18

Project No./Code
NHPP 0253-275
23019
Sheet Number 3

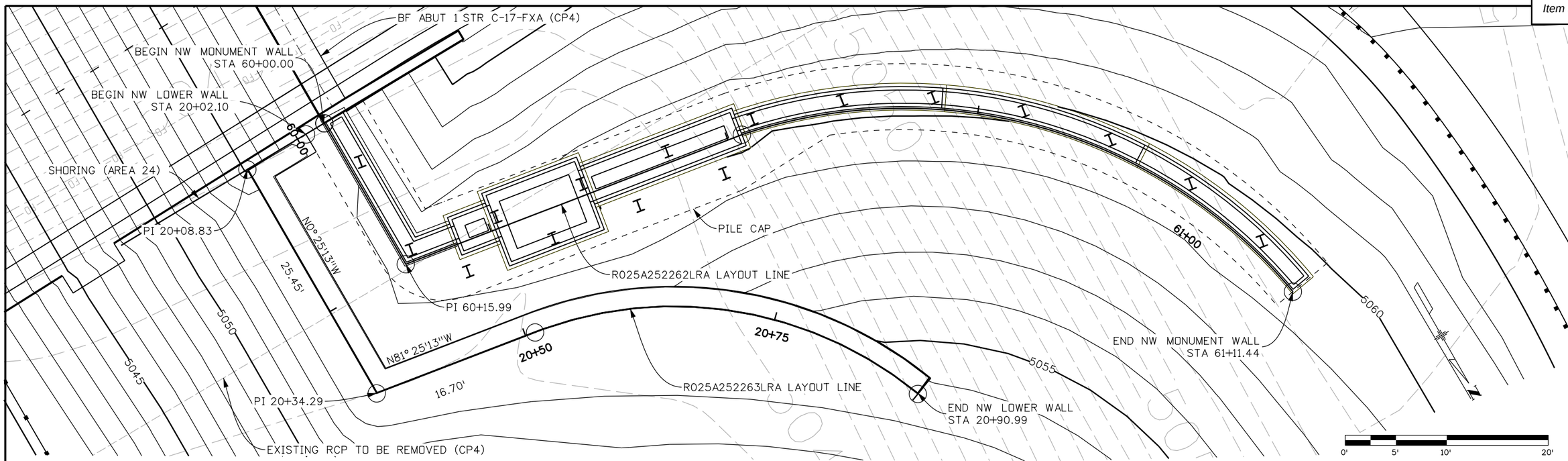

PLAN

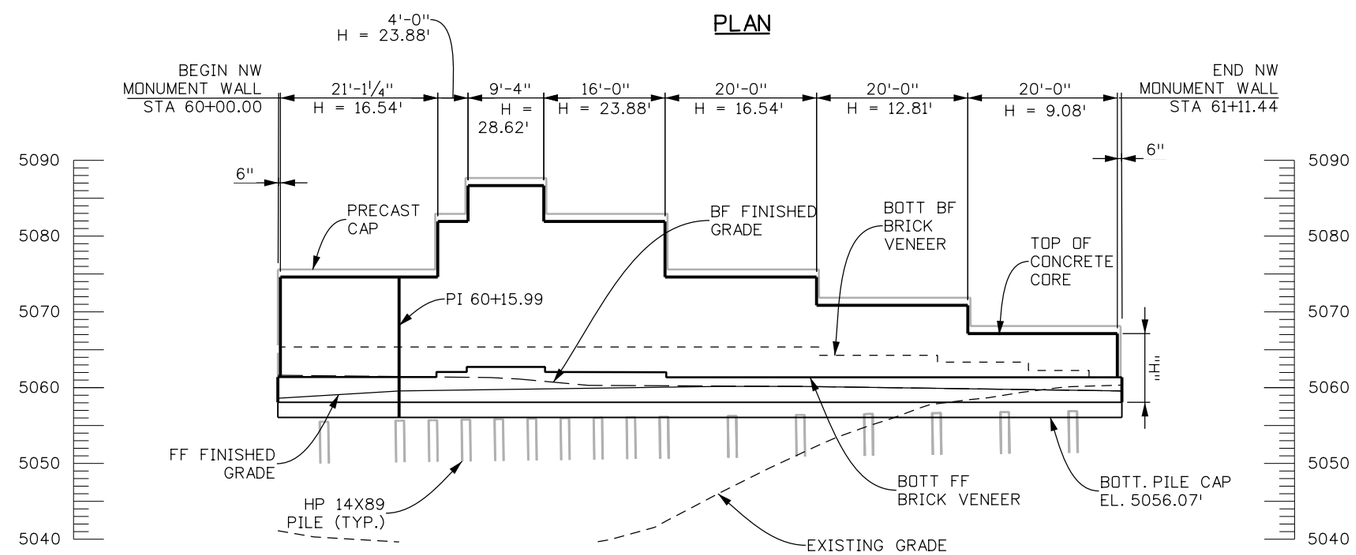

NORTHWEST MONUMENT WALL PROFILE

TAKEN ALONG LAYOUT LINE

NORTHWEST MONUMENT WALL			
STA	BOTT FF BRICK VENEER	BOTT BF BRICK VENEER	TOP OF CONCRETE
60+00.50	5061.39	5065.37	5074.61
60+21.61	5062.05	5065.37	5081.95
60+25.61	5062.72	5065.37	5086.69
60+34.94	5062.05	5065.37	5081.95
60+50.94	5061.39	5065.37	5074.61
60+70.94	5061.39	5065.37	5070.88
60+86.94	5061.39	5064.26	5070.88
60+90.94	5061.39	5063.39	5067.15
60+98.94	5061.39	5063.39	5067.15
61+06.94	5061.39	5062.29	5067.15
61+10.94	5061.39	5061.39	5067.15
NOTE: ALL ELEVATIONS TAKEN AT AHEAD STATION			

0' 10' 20' 40'
PROFILE VIEW

TEMPORARY CONSTRUCTION NAME	STRUCTURE NUMBER **
NW MONUMENT WALL	R025A252262LRA
NW LOWER WALL	R025A252263LRA

RFC SUBMITTAL - NOT FOR CONSTRUCTION - OCTOBER 25, 2021

Print Date: 10/6/2021	Sheet Revisions			Colorado Department of Transportation	As Constructed	I-25 EXPR. LANES SEG 5&6 CP5	Project No./Code
File Name: 23019_CP5_WF19_NW_Monument_Wall.dgn	Date:	Comments	Init.	1050 Lee Hill Road Boulder, CO 80302 Phone: 303-546-5676 FAX: 303-444-0751	No Revisions:	NW MONUMENT WALL	NHPP 0253-275
Horiz. Scale: 1:10.0004 Vert. Scale: As Noted					Revised:	Designer: D. ADAMS / Structure Numbers: **	23019
Staff Bridge Branch: Unit 0222 Unit Leader: AAH				Region 4 ALG	Void:	Detailer: D. GONZALES	Sheet Number 3
Sub-consultant RockSol Consulting Group, Inc.						Sheet Subset: WALL / Subset Sheets: WF19	

Design	INITIAL	DATE	Detail	INITIAL	DATE	Quantities	INITIAL	DATE
Designed By	DMA	8/21	Detailed By	DG	8/21	Quantities By	DMA	8/21
Checked By	AAD	10/21	Checked By	MRM	5/21	Checked By	AAD	5/21

10/6/2021 CDOT-DefaultPrinter_ORD.pltcfg CDOT-PenTable.tbl

pw:\\mulereng-pw.bentley.com:mulereng-pw-01\Documents\2012 Projects\12-003 I-25 SH 66 to SH 402\CP5\Bridge\RockSol\Drawings\23019_CP5_WF19_NW_Monument_Wall.dgn adams 4:56:11 PM

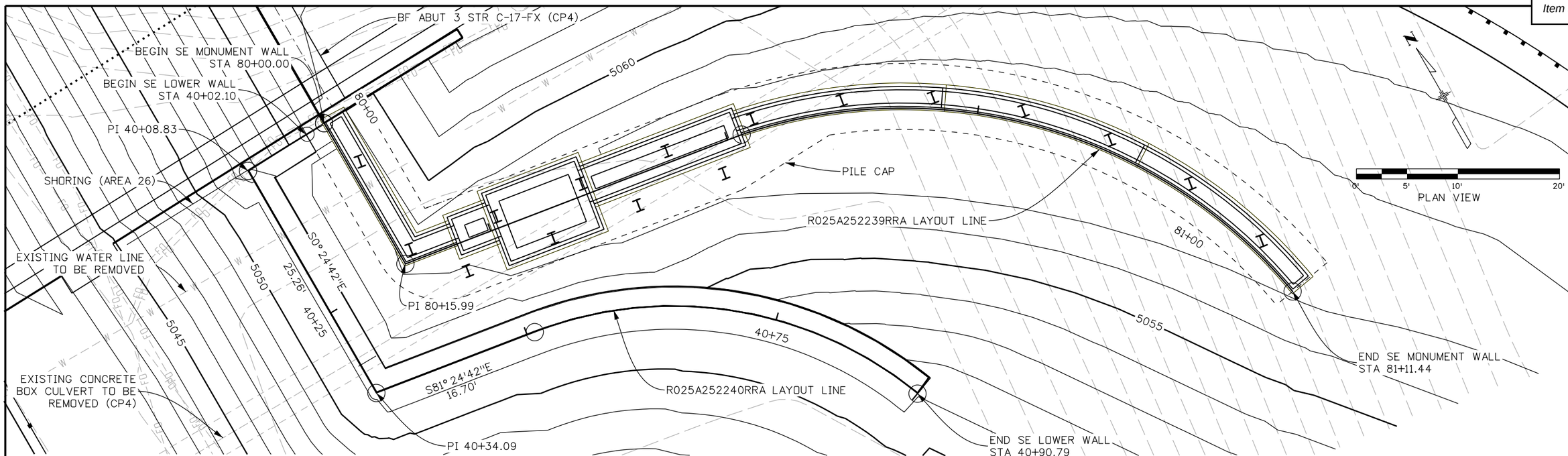

PLAN

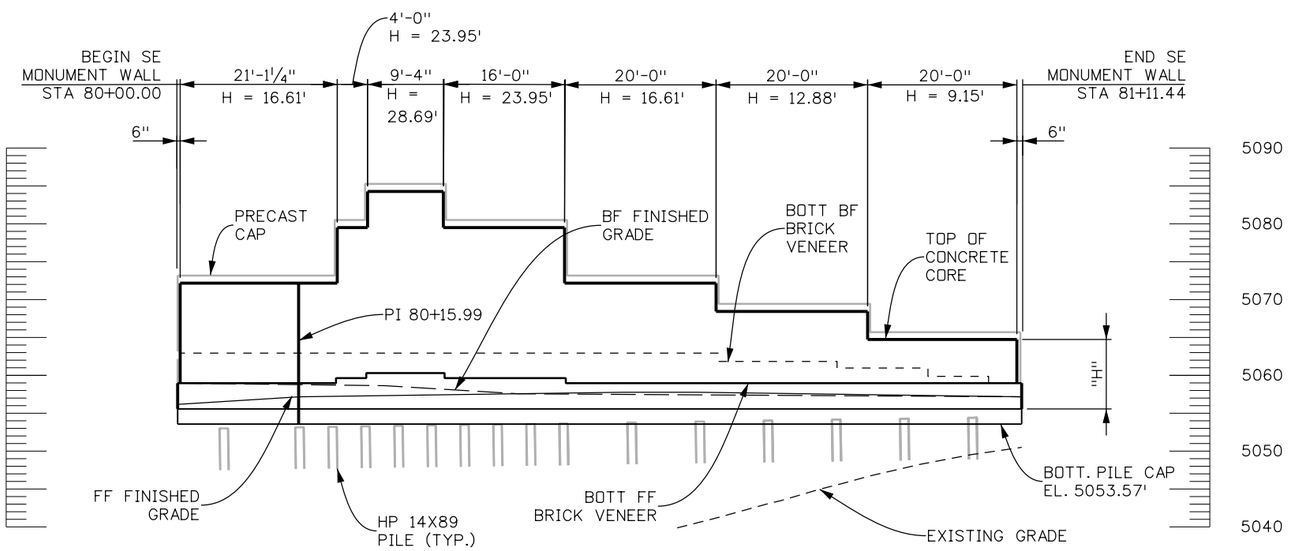

SOUTHEAST MONUMENT WALL PROFILE

TAKEN ALONG LAYOUT LINE

SOUTHEAST MONUMENT WALL			
STA	BOTT FF BRICK VENEER	BOTT BF BRICK VENEER	TOP OF CONCRETE
80+00.50	5058.96	5062.94	5072.18
80+21.61	5059.63	5062.94	5079.52
80+25.61	5060.29	5062.94	5084.26
80+34.94	5059.63	5062.94	5079.52
80+50.94	5058.96	5062.94	5072.18
80+70.94	5058.96	5062.94	5068.45
80+86.94	5058.96	5061.84	5068.45
80+90.94	5058.96	5060.96	5064.72
80+98.94	5058.96	5060.96	5064.72
81+06.94	5058.96	5059.87	5064.72
81+10.94	5058.96	5058.96	5064.72
NOTE: ALL ELEVATIONS TAKEN AT AHEAD STATION			

0' 10' 20' 40'
PROFILE VIEW

TEMPORARY CONSTRUCTION NAME	STRUCTURE NUMBER **
SE MONUMENT WALL	R025A252239RRA
SE LOWER WALL	R025A252240RRA

RFC SUBMITTAL - NOT FOR CONSTRUCTION - OCTOBER 25, 2021

Print Date: 10/6/2021	Sheet Revisions			Colorado Department of Transportation	As Constructed	I-25 EXPR. LANES SEG 5&6 CP5	Project No./Code
File Name: 23019_CP5_WF20_SE_Monument_Wall.dgn	Date:	Comments	Init.	1050 Lee Hill Road Boulder, CO 80302 Phone: 303-546-5676 FAX: 303-444-0751	No Revisions:	SE MONUMENT WALL	NHPP 0253-275
Horiz. Scale: 1:10.0004 Vert. Scale: As Noted					Revised:	Designer: D. ADAMS / Structure Numbers: **	23019
Staff Bridge Branch: Unit 0222 Unit Leader: AAH				Region 4 ALG	Void:	Detailer: D. GONZALES	Sheet Number 3
Sub-consultant RockSol Consulting Group, Inc.						Sheet Subset: WALL / Subset Sheets: WF20	

Design	INITIAL	DATE	Detail	INITIAL	DATE	Quantities	INITIAL	DATE
Designed By	DMA	8/21	Detailed By	DG	8/21	Quantities By	DMA	8/21
Checked By	AAD	10/21	Checked By	MRM	8/21	Checked By	AAD	8/21

adams 4:58:50 PM pw:\\mulleren-pw.bentley.com:mullerenq-pw-01\Documents\2012 Projects\12-003 I-25 SH 66 to SH 402\CP5\Bridge\RockSol\Drawings\23019_CP5_WF20_SE_Monument_Wall.dgn

10/6/2021 CDOT-DefaultPrinter_ORD.pltcfg CDOT-PenTable.tbl

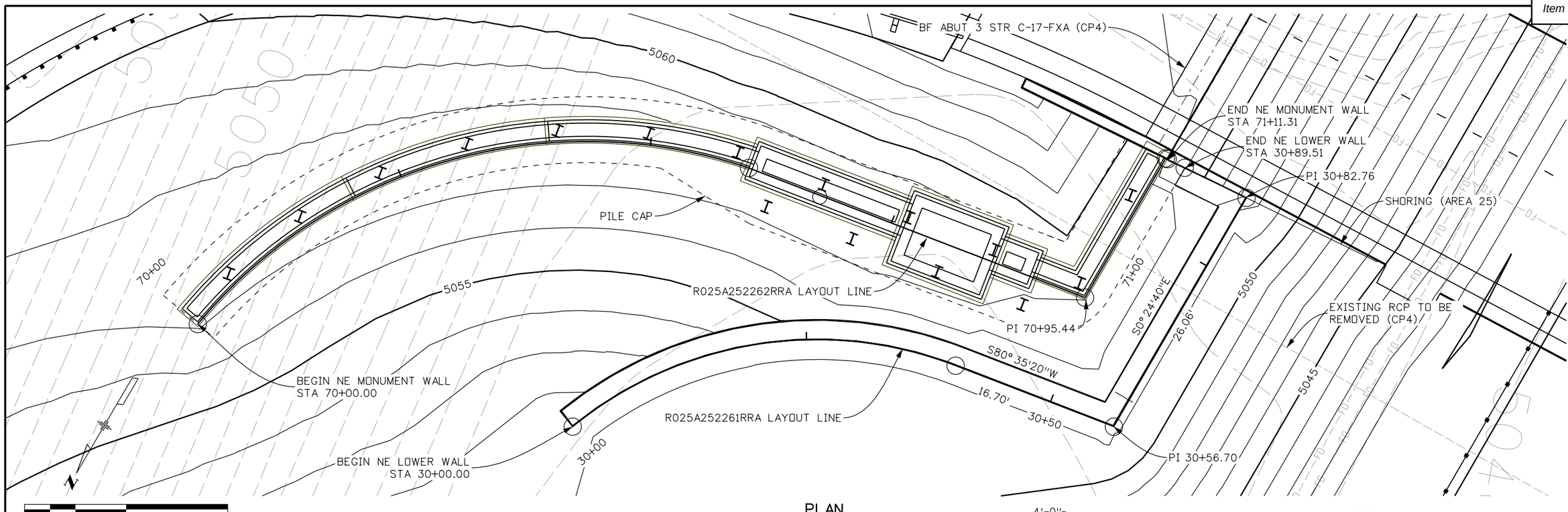

PLAN VIEW

NORTHEAST MONUMENT WALL			
STA	BOTT FF BRICK VENEER	BOTT BF BRICK VENEER	TOP OF CONCRETE
70+00.50	5058.83	5058.83	5064.59
70+04.50	5059.74	5058.83	5064.59
70+12.50	5060.83	5058.83	5064.59
70+20.50	5060.83	5058.83	5068.32
70+24.50	5061.71	5058.83	5068.32
70+40.50	5062.81	5058.83	5072.05
70+60.50	5062.81	5059.50	5079.39
70+76.50	5062.81	5060.16	5084.13
70+85.83	5062.81	5059.50	5079.39
70+89.83	5062.81	5058.83	5072.05
71+10.81	5062.81	5058.83	5072.05
NOTE: ALL ELEVATIONS TAKEN AT AHEAD STATION			

0' 10' 20' 40'

PROFILE VIEW

PLAN

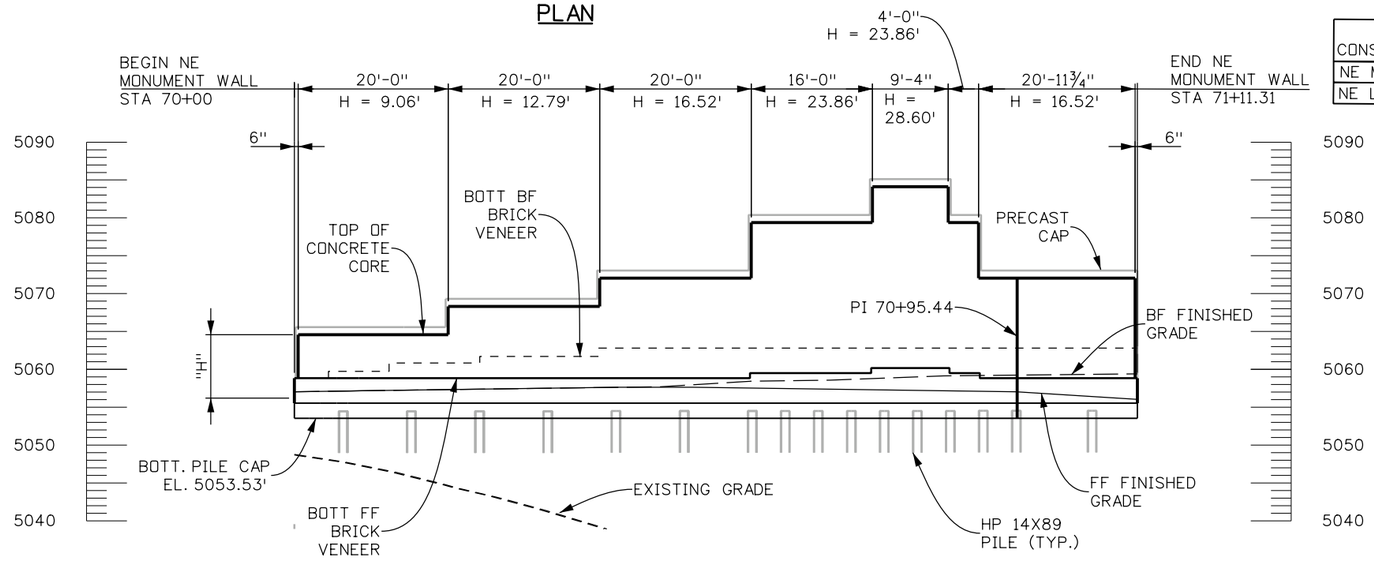

NORTHEAST MONUMENT WALL PROFILE
TAKEN ALONG LAYOUT LINE

TEMPORARY CONSTRUCTION NAME	STRUCTURE NUMBER **
NE MONUMENT WALL	R025A252262RRA
NE LOWER WALL	R025A252261RRA

Design	INITIAL	DATE	Detail	INITIAL	DATE	Quantities	INITIAL	DATE
Designed By	DMA	8/21	Detailed By	DG	8/21	Quantities By	DMA	8/21
Checked By	AAD	10/21	Checked By	MRM	8/21	Checked By	AAD	8/21

adams 5:02:14 PM pw:\\mulleren g-pw.bentley.com:mulleren g-pw-01\Documents\2012 Projects\12-003 I-25 SH 66 to SH 402\CP5\Bridge\RockSol\Drawings\23019_CP5_WF21_NE_Monument_Wall.dgn

10/6/2021 CDOT-DefaultPrinter_DRD.pltcfg CDOT-PenTable.tbl

Print Date: 10/6/2021
File Name: 23019_CP5_WF21_NE_Monument_Wall.dgn
Horiz. Scale: 1:10 Vert. Scale: As Noted
Staff Bridge Branch: Unit 0222 Unit Leader: AAH
Sub-consultant RockSol Consulting Group, Inc.

Sheet Revisions

Date:	Comments	Init.

Colorado Department of Transportation
1050 Lee Hill Road
Boulder, CO 80302
Phone: 303-546-5676
FAX: 303-444-0751
Region 4 ALG

As Constructed
No Revisions:
Revised:
Void:

I-25 EXPR. LANES SEG 5&6 CP5
NE MONUMENT WALL
Designer: D. ADAMS
Detailer: D. GONZALES
Sheet Subset: WALL
Structure Numbers **
Subset Sheets: WF21

Project No./Code
NHPP 0253-275
23019
Sheet Number 33

RFC SUBMITTAL - NOT FOR CONSTRUCTION - OCTOBER 25, 2021

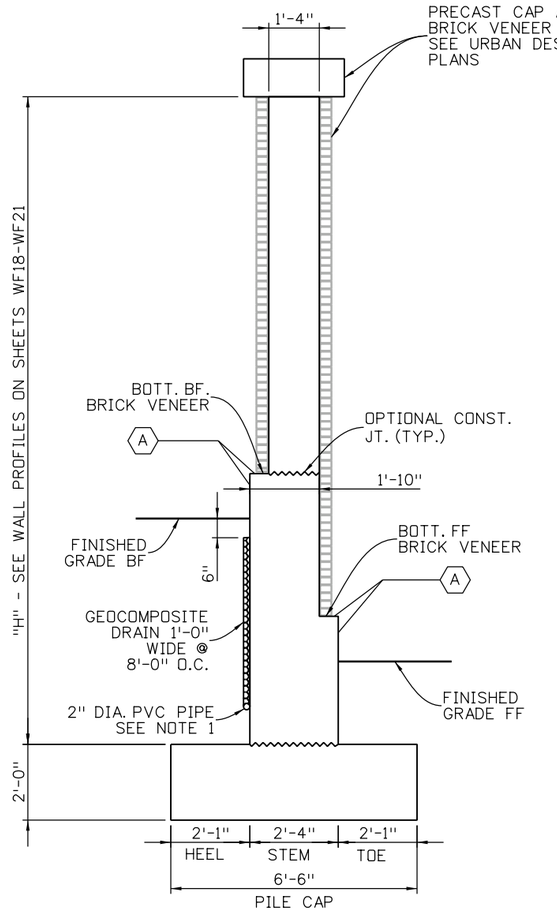

MONUMENT WALL DIMENSIONS: A/14

SCALE: 1/4"=1'

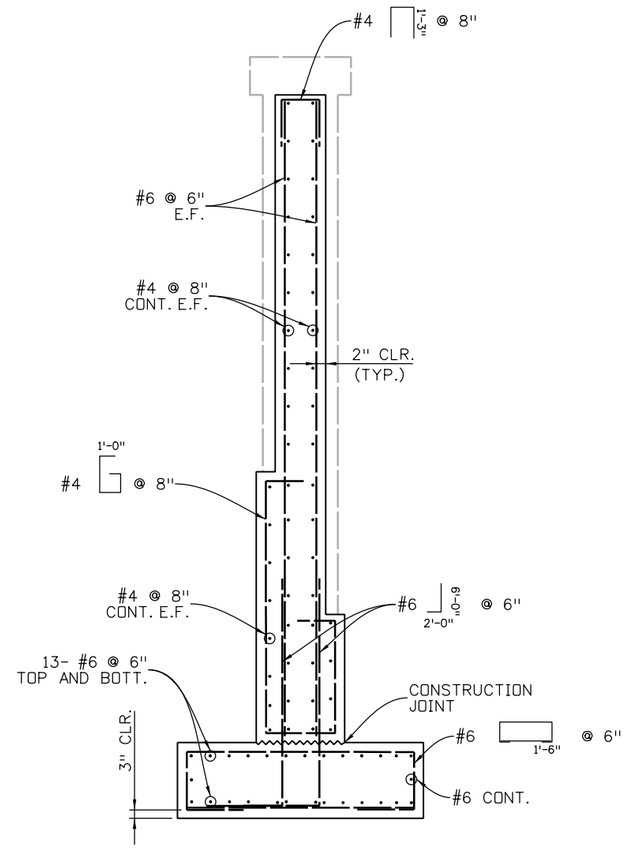

MONUMENT WALL REINFORCEMENT: A/14

SCALE: 1/4"=1'

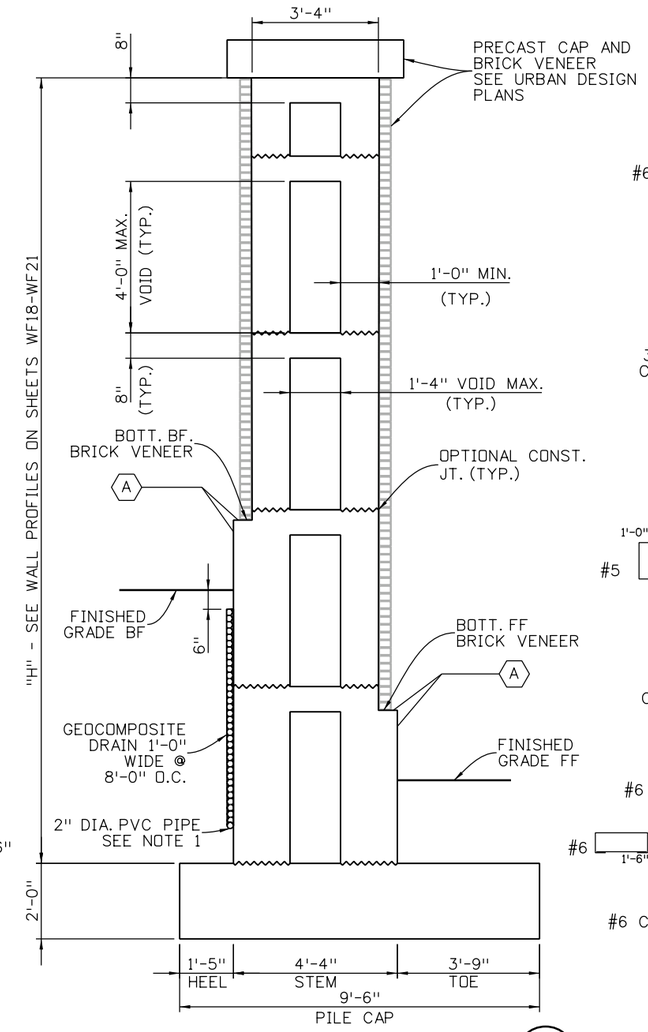

MONUMENT WALL DIMENSIONS: B/14

SCALE: 1/4"=1'

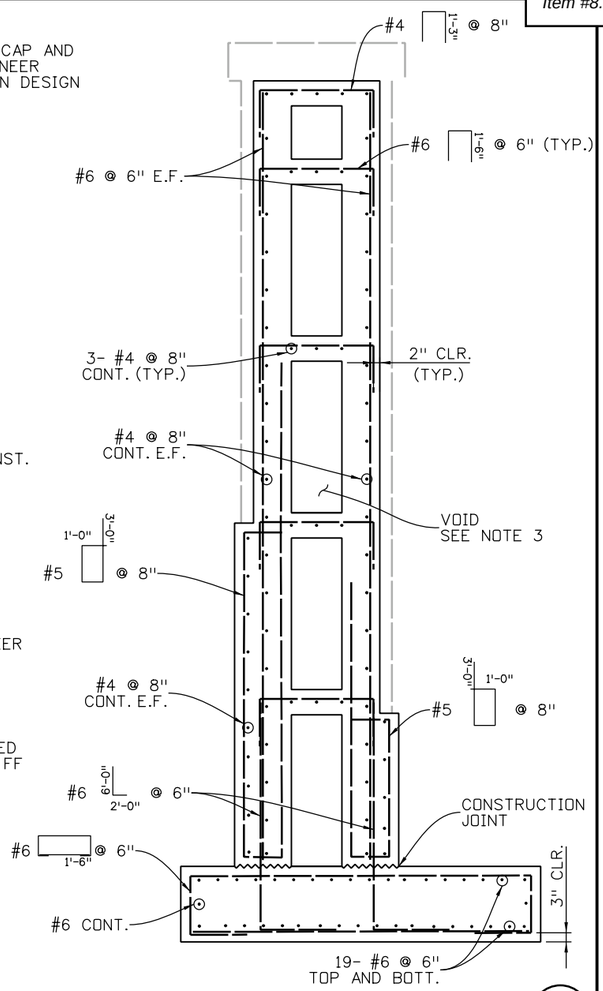

MONUMENT WALL REINFORCEMENT: B/14

SCALE: 1/4"=1'

NOTES:

1. 2" DIA. PVC PIPE, UPPER SLOT, FOR INSERTION OF GEO. DRAIN. 2" DIA. PVC PIPE SHALL HAVE 2% LONGITUDINAL SLOPE. DAY LIGHT AT END OF WALL AWAY FROM BRIDGE.
2. ALL LABOR AND MATERIALS FOR CONSTRUCTION OF MONUMENT WALLS, INCLUDING SECTIONS A, B, AND C SHALL BE PAID FOR ITEM 519 CORNER MONUMENT (EACH).
3. VOIDS SHALL BE FORMED USING STYROFOAM BLOCKS OR WOOD FORMS. COST OF FORMING VOIDS SHALL BE INCIDENTAL TO 519 CORNER MONUMENT (EACH).
4. MINIMUM 2'-3" SPLICE LENGTH FOR #4 BARS. 3'-4" MINIMUM FOR #6 BARS. 2'-10" MINIMUM FOR #5 BARS. REQUIRED LEG LENGTHS SIMILAR TO DEVELOP BARS AROUND CORNERS.
5. NOMINAL WALL WIDTHS REPORTED ON PLANS. WALL WIDTHS MAY BE CHANGED +/- 3" PER SIDE, +/- 6" TOTAL, TO ACCOMODATE ARCHITECTURAL TREAMENTS AND PROFILES. SEE URBAN DESIGN SHEETS.
6. SEE URBAN DESIGN SHEETS FOR ARCHITECTURAL TREATMENTS AND VERTICAL REVEALS IN EXPOSED CONCRETE.

(A) = LIMITS OF STRUCTURAL CONCRETE STAIN COLOR AMS-STD 37150 TO 1'-0" BELOW FINISHED GRADE

TEMPORARY CONSTRUCTION NAME	STRUCTURE NUMBER **
SW MONUMENT WALL	R025A252234LRA
NW MONUMENT WALL	R025A252262LRA
SE MONUMENT WALL	R025A252239RRA
NE MONUMENT WALL	R025A252262RRA

Design	INITIAL	DATE	Detail	INITIAL	DATE	Quantities	INITIAL	DATE
Designed By	DMA	8/21	Detailed By	DMA	8/21	Quantities By	DMA	8/21
Checked By	AAD	10/21	Checked By	MRM	8/21	Checked By	AAD	8/21

adams 5:05:28 PM pw:\\mullereng-pw.bentley.com:mullereng-pw-01\Documents\2012 Projects\12-003 I-25 SH 66 to SH 402\CP5\Bridge\RockSol\Drawings\23019_CP5_WF22_Monument_Wall_Details.dgn

10/6/2021 CDOT-DefaultPrinter_DRD.pltcfg CDOT-PenTable.tbl

Print Date: 10/6/2021
File Name: 23019_CP5_WF22_Monument_Wall_Details.dgn
Horiz. Scale: 1:1 Vert. Scale: As Noted
Staff Bridge Branch: Unit 0222 Unit Leader: AAH
Sub-consultant RockSol Consulting Group, Inc.

Sheet Revisions

Date:	Comments	Init.

Colorado Department of Transportation
1050 Lee Hill Road
Boulder, CO 80302
Phone: 303-546-5676
FAX: 303-444-0751
Region 4 ALG

As Constructed
No Revisions:
Revised:
Void:

I-25 EXPR. LANES SEG 5&6 CP5
MONUMENT WALL DETAILS

Designer: D. ADAMS
Detailer: D. GONZALES
Sheet Subset: WALL
Structure Numbers **
Subset Sheets: WF22

Project No./Code
NHPP 0253-275
23019
Sheet Number 34

RFC SUBMITTAL - NOT FOR CONSTRUCTION - OCTOBER 25, 2021

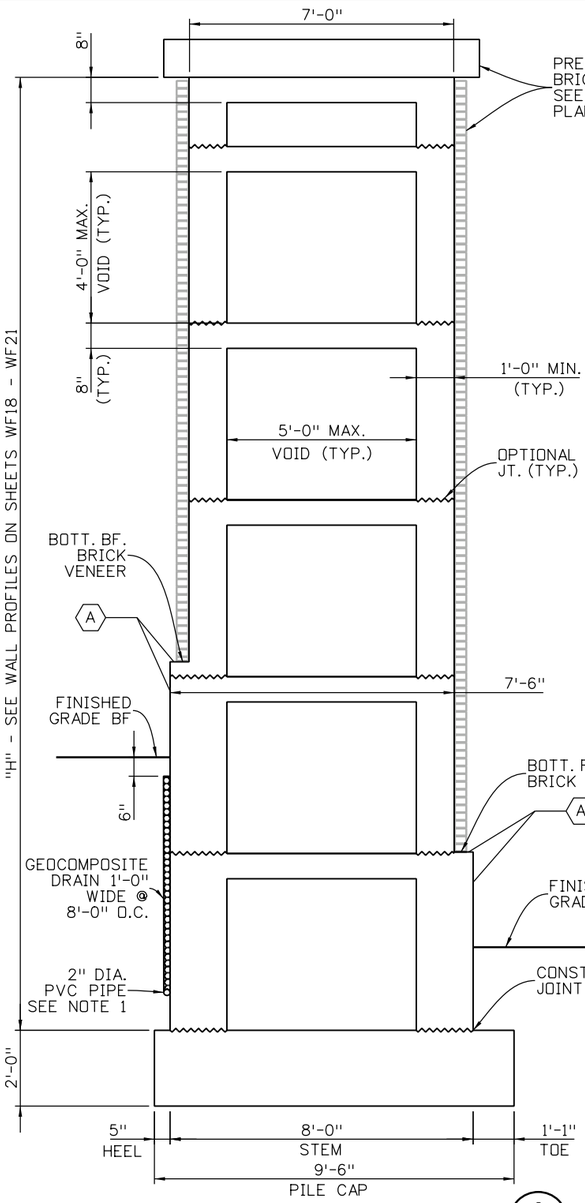

MONUMENT WALL DIMENSIONS: C/14
SCALE: 1/4"=1'

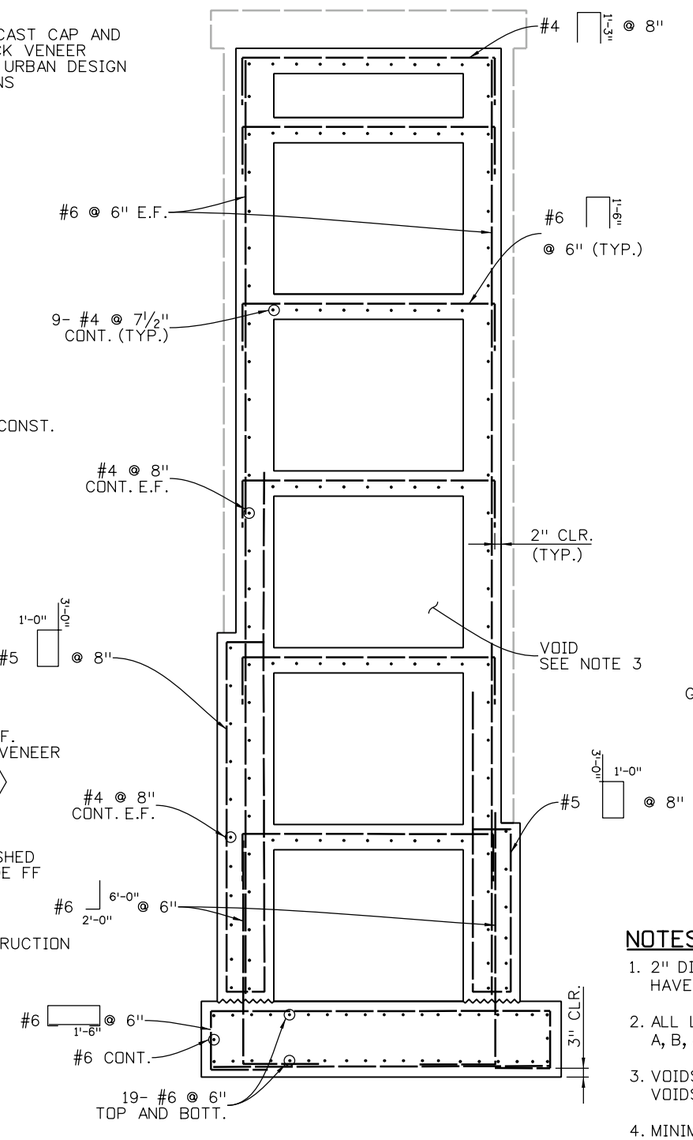

MONUMENT WALL REINFORCEMENT: C/14
SCALE: 1/4"=1'

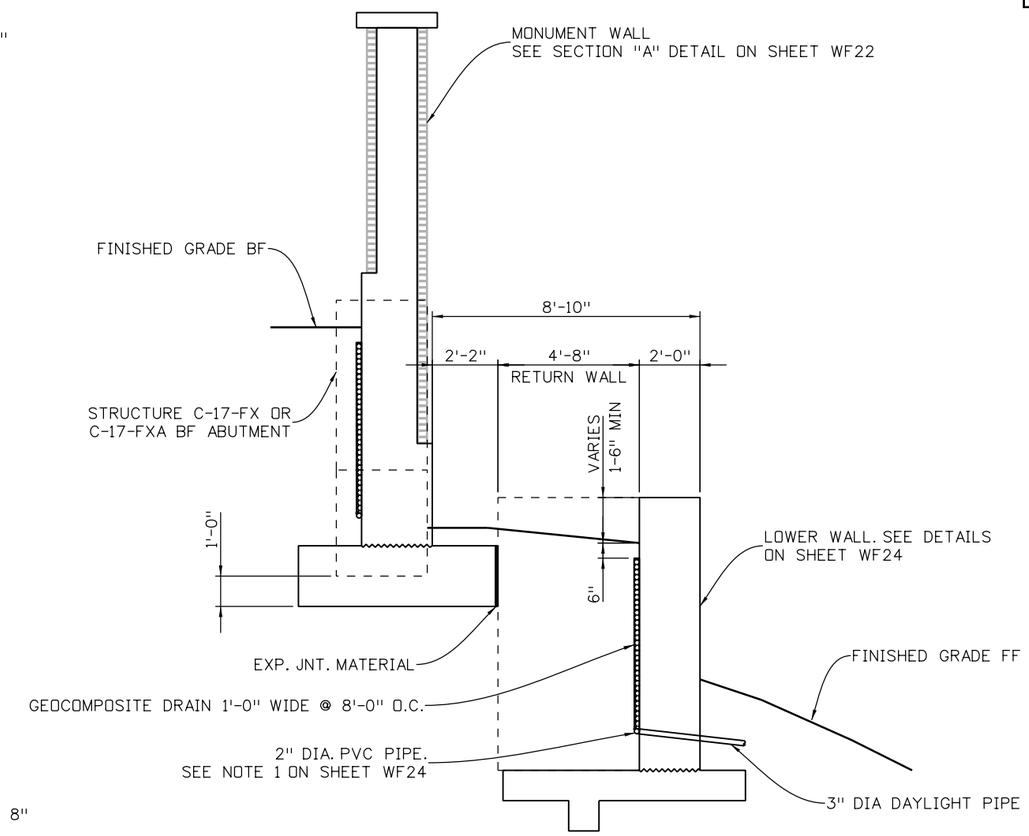

MONUMENT WALL DIMENSIONS: D/14
SCALE: 1" = 5'

NOTES:

1. 2" DIA. PVC PIPE, UPPER SLOT, FOR INSERTION OF GEO. DRAIN. 2" DIA. PVC PIPE SHALL HAVE 2% LONGITUDINAL SLOPE. DAY LIGHT AT END OF WALL AWAY FROM BRIDGE.
2. ALL LABOR AND MATERIALS FOR CONSTRUCTION OF MONUMENT WALLS, INCLUDING SECTIONS A, B, AND C SHALL BE PAID FOR ITEM 519 CORNER MONUMENT (EACH).
3. VOIDS SHALL BE FORMED USING STYROFOAM BLOCKS OR WOOD FORMS. COST OF FORMING VOIDS SHALL BE INCIDENTAL TO 519 CORNER MONUMENT (EACH).
4. MINIMUM 2'-3" SPLICE LENGTH FOR #4 BARS. 3'-4" SPLICE LENGTH MINIMUM FOR #6 BARS. 2'-10" MINIMUM FOR #5 BARS. REQUIRED LEG LENGTHS SIMILAR TO DEVELOP BARS AROUND CORNERS.
5. NOMINAL WALL WIDTHS REPORTED ON PLANS. WALL WIDTHS MAY BE CHANGED +/- 3" PER SIDE, +/- 6" TOTAL, TO ACCOMODATE ARCHITECTURAL TREATMENTS AND PROFILES.
6. SEE URBAN DESIGN SHEETS FOR ARCHITECTURAL TREATMENTS AND VERTICAL REVEALS IN EXPOSED CONCRETE.

** APPLIES TO: WALLS LISTED ON WF22 - MONUMENT WALL DETAILS

A = LIMITS OF STRUCTURAL CONCRETE STAIN COLOR AMS-STD 37150 TO 1'-0" BELOW FINISHED GRADE

RFC SUBMITTAL - NOT FOR CONSTRUCTION - OCTOBER 25, 2021

Design	INITIAL	DATE	Detail	INITIAL	DATE	Quantities	INITIAL	DATE
Designed By	DMA	8/21	Detailed By	DMA	8/21	Quantities By	DMA	8/21
Checked By	AAD	10/21	Checked By	MRM	8/21	Checked By	AAD	8/21

adams 5:07:31 PM pw:\\mulleren-pw.bentley.com:mulleren-pw-01\Documents\2012 Projects\12-003 I-25 SH 66 to SH 402\CP5\Bridge\RockSol\Drawings\23019_CP5_WF23_Monument_Wall_Details.dgn

10/6/2021 CDOT-DefaultPrinter_ORD.pltcfg CDOT-PenTable.tbl

Print Date: 10/6/2021	
File Name: 23019_CP5_WF23_Monument_Wall_Details.dgn	
Horiz. Scale: 1:1	Vert. Scale: As Noted
Staff Bridge Branch: Unit 0222	Unit Leader: AAH
Sub-consultant RockSol Consulting Group, Inc.	

Sheet Revisions

Date:	Comments	Init.

Colorado Department of Transportation
1050 Lee Hill Road
Boulder, CO 80302
Phone: 303-546-5676
FAX: 303-444-0751
Region 4 ALG

As Constructed
No Revisions:
Revised:
Void:

I-25 EXPR. LANES SEG 5&6 CP5
MONUMENT WALL DETAILS

Designer:	D. ADAMS	Structure Numbers	**
Detailer:	D. GONZALES		
Sheet Subset:	WALL	Subset Sheets: WF23	

Project No./Code
NHPP 0253-275
23019
Sheet Number 35

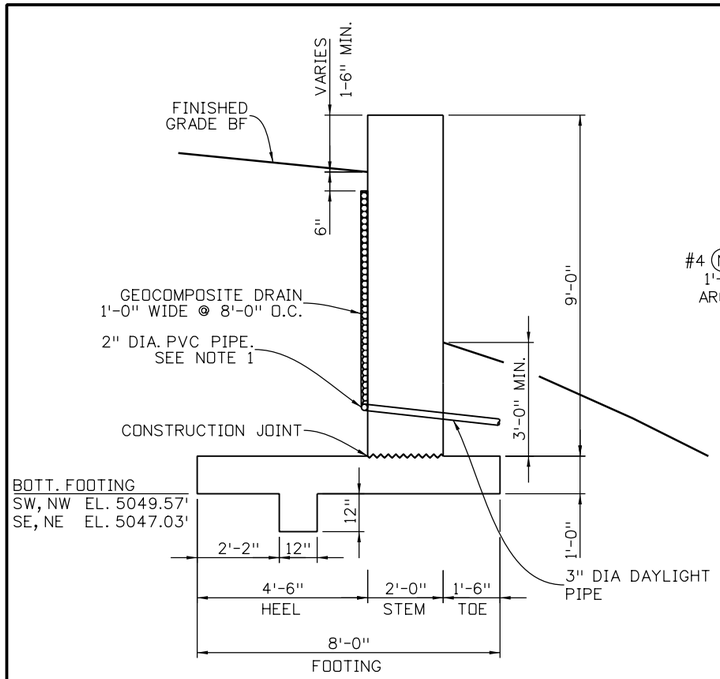

LOWER WALL DIMENSIONS: E/14

SCALE: 1/4"=1'

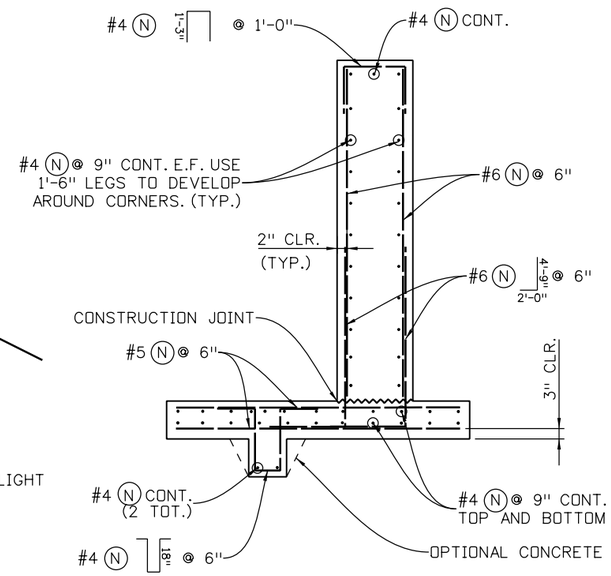

LOWER WALL REINFORCEMENT:

SCALE: 1/4"=1'

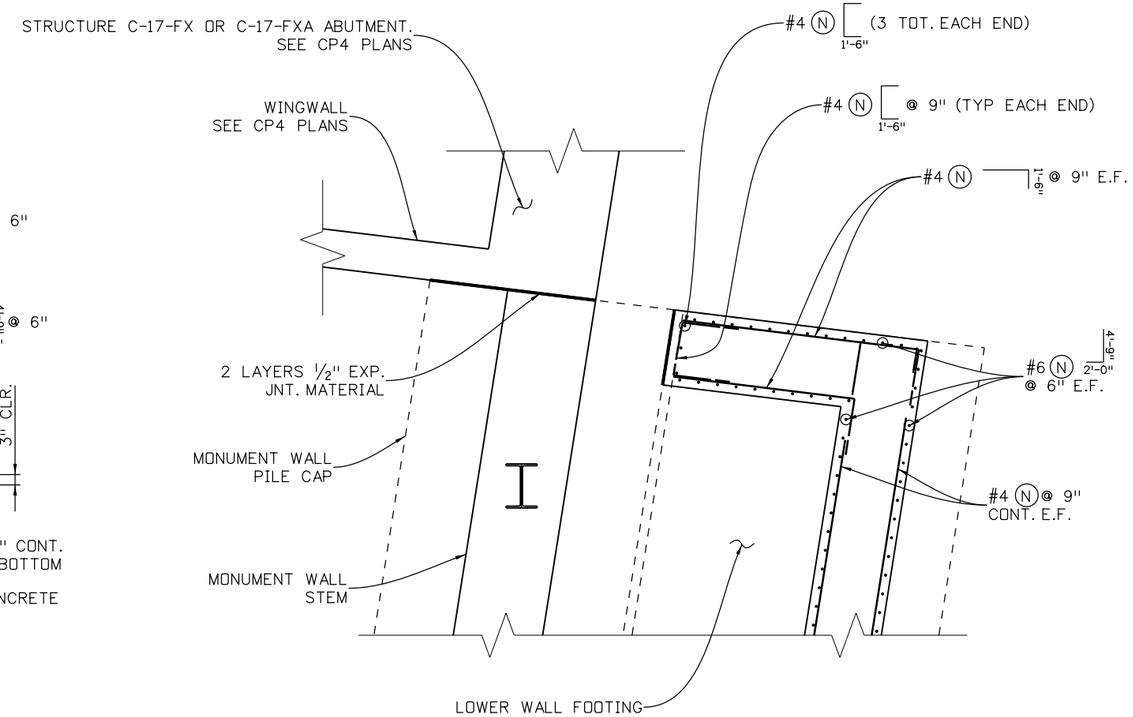

RETURN WALL DETAIL

SCALE: 1/4"=1'

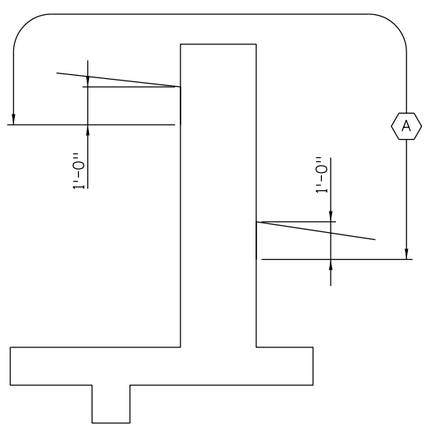

STRUCTURAL STAIN DETAIL

A = LIMITS OF STRUCTURAL CONCRETE STAIN COLOR AMS-STD 37150 TO 1'-0" BELOW FINISHED GRADE

NOTES:

1. 2" DIA. PVC PIPE, UPPER SLOT, FOR INSERTION OF GEO. DRAIN. 2" DIA. PVC PIPE SHALL HAVE 2% LONGITUDINAL SLOPE. DAY LIGHT USING 3" PIPE. INCIDENTAL TO ITEM 605 GEOCOMPOSITE DRAIN.
2. MINIMUM 2'-3" SPLICE LENGTH FOR #4 BARS. 3'-4" SPLICE LENGTH MINIMUM FOR #6 BARS. 2'-10" MINIMUM FOR #5 BARS. REQUIRED LEG LENGTHS SIMILAR TO DEVELOP BARS AROUND CORNERS.

TEMPORARY CONSTRUCTION NAME	STRUCTURE NUMBER **
SW LOWER WALL	R025A252231LRA
NW LOWER WALL	R025A252263LRA
SE LOWER WALL	R025A252240RRA
NE LOWER WALL	R025A252261RRA

RFC SUBMITTAL - NOT FOR CONSTRUCTION - OCTOBER 25, 2021

Design	INITIAL	DATE	Detail	INITIAL	DATE	Quantities	INITIAL	DATE
Designed By	DMA	8/21	Detailed By	DMA	8/21	Quantities By	DMA	8/21
Checked By	AAD	10/21	Checked By	MRM	8/21	Checked By	AAD	8/21

Print Date: 10/6/2021
File Name: 23019_CP5_WF24_Lower Wall_Details.dgn
Horiz. Scale: 1:1 Vert. Scale: As Noted
Staff Bridge Branch: Unit 0222 Unit Leader: AAH
Sub-consultant RockSol Consulting Group, Inc.

Sheet Revisions		
Date:	Comments	Init.

Colorado Department of Transportation
1050 Lee Hill Road
Boulder, CO 80302
Phone: 303-546-5676
FAX: 303-444-0751
Region 4 ALG

As Constructed
No Revisions:
Revised:
Void:

I-25 EXPR. LANES SEG 5&6 CP5
LOWER WALL DETAILS

Designer: D. ADAMS
Detailer: D. ADAMS
Structure Numbers **
Sheet Subset: WALL
Subset Sheets: WF24

Project No./Code
NHPP 0253-275
23019
Sheet Number 3

adams 5:12:39 PM pw:\\mulleneng-pw.bentley.com:mulleneng-pw-01\Documents\2012 Projects\12-003 I-25 SH 66 to SH 402\CP5\Bridge\RockSol\Drawings\23019_CP5_WF24_Lower Wall_Details
10/6/2021 CDOT-DefaultPrinter_ORD.pltcfg CDOT-PenTable.tbl

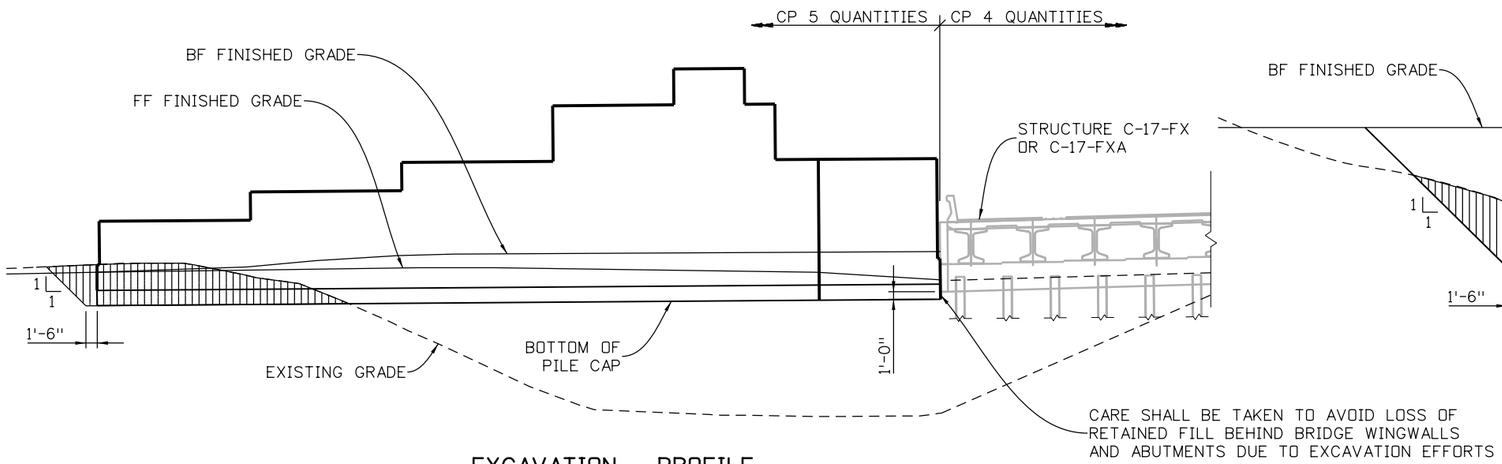

EXCAVATION - PROFILE

TAKEN AT ℄ PILE CAP

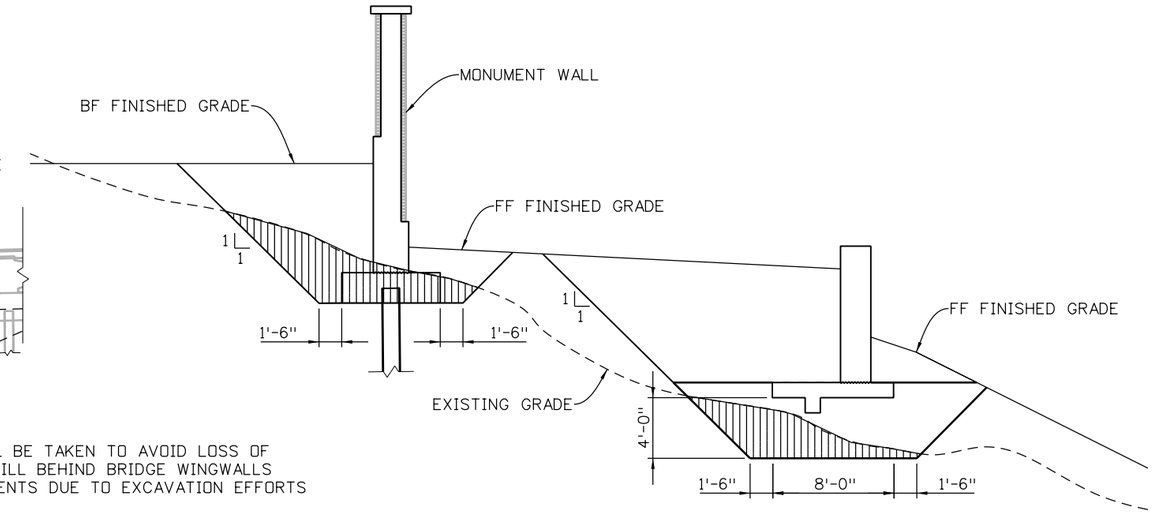

EXCAVATION - TYPICAL SECTION

STRUCTURE EXCAVATION

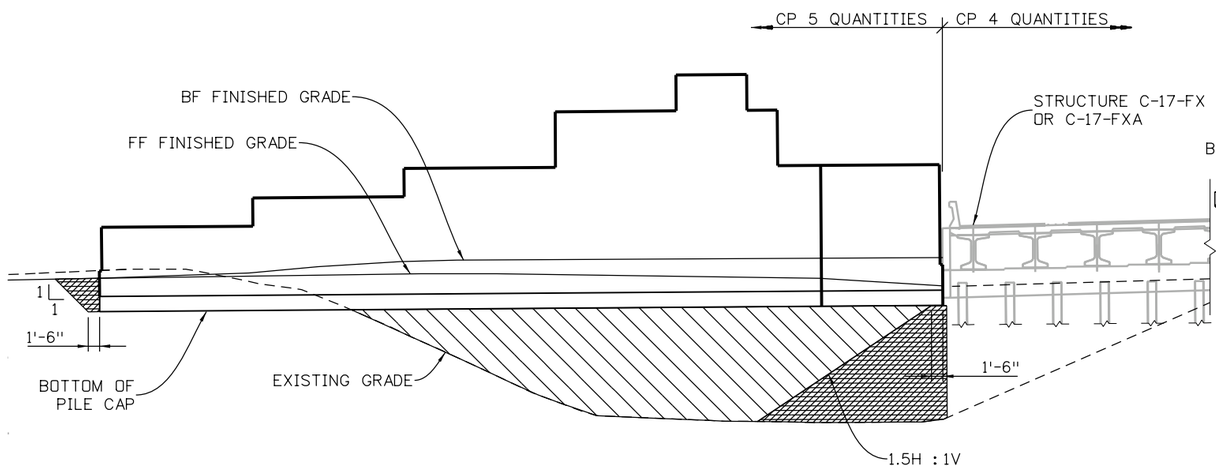

BACKFILL - PROFILE

TAKEN AT ℄ PILE CAP

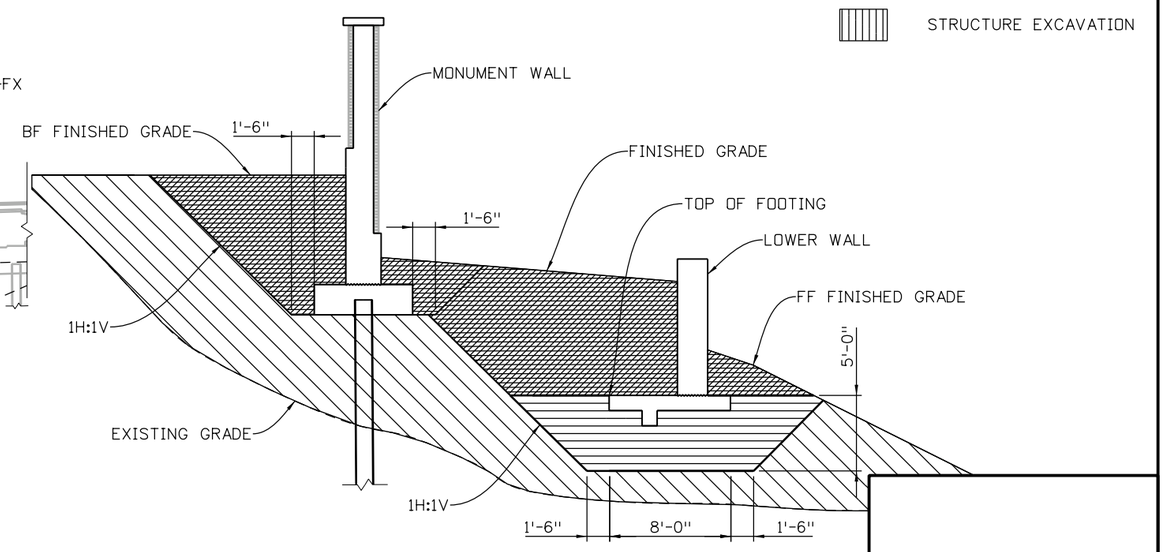

BACKFILL - TYPICAL SECTION

TEMPORARY CONSTRUCTION NAME	STRUCTURE NUMBER **
SW MONUMENT WALL	R025A252234LRA
NW MONUMENT WALL	R025A252262LRA
SE MONUMENT WALL	R025A252239RRA
NE MONUMENT WALL	R025A252262RRA

TEMPORARY CONSTRUCTION NAME	STRUCTURE NUMBER ***
SW LOWER WALL	R025A252231LRA
NW LOWER WALL	R025A252263LRA
SE LOWER WALL	R025A252240RRA
NE LOWER WALL	R025A252261RRA

STRUCTURAL BACKFILL (CLASS 1)

STRUCTURAL BACKFILL (CLASS 2)

ROADWAY EMBANKMENT (ROADWAY QUANTITIES)

RFC SUBMITTAL - NOT FOR CONSTRUCTION - OCTOBER 25, 2021

Design	INITIAL	DATE	Detail	INITIAL	DATE	Quantities	INITIAL	DATE
Designed By	DMA	8/21	Detailed By	DMA	8/21	Quantities By	DMA	8/21
Checked By	AAD	10/21	Checked By	MRM	8/21	Checked By	AAD	8/21

adams 5:14:31 PM pw:\\mulereng-pw.bentley.com:mulereng-pw-01\Documents\2012 Projects\12-003 I-25 SH 66 to SH 402\CP5\Bridge\RockSol\Drawings\23019_CP5_WF25_Excav & Backfill.dgn

10/6/2021 CDOT-DefaultPrinter_ORD.pltcfg CDOT-PenTable.tbl

Print Date: 10/6/2021
File Name: 23019_CP5_WF25_Excav & Backfill.dgn
Horiz. Scale: 1:30 Vert. Scale: As Noted
Staff Bridge Branch: Unit 0222 Unit Leader: AAH
Sub-consultant RockSol Consulting Group, Inc.

Sheet Revisions

Date:	Comments	Init.

Colorado Department of Transportation
1050 Lee Hill Road
Boulder, CO 80302
Phone: 303-546-5676
FAX: 303-444-0751
Region 4 ALG

As Constructed
No Revisions:
Revised:
Void:

I-25 EXPR. LANES SEG 5&6 CP5
EXCAVATION AND BACKFILL DETAILS
Designer: D. ADAMS
Detailer: D. ADAMS
Sheet Subset: WALL
Structure Numbers ** ***
Subset Sheets: WF25

Project No./Code
NHPP 0253-275
23019
Sheet Number 3

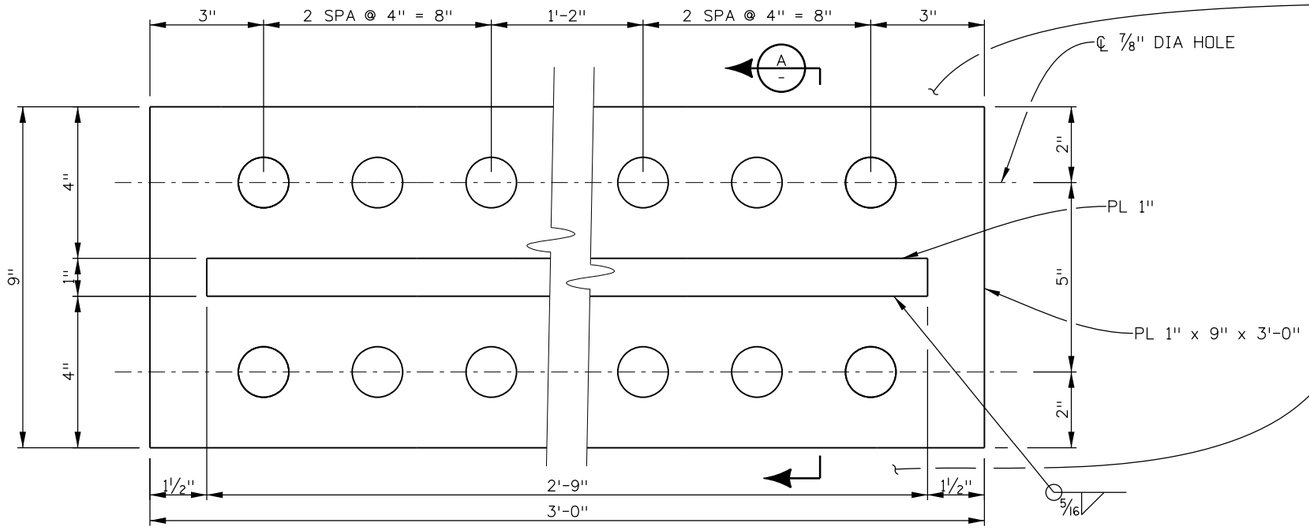

PLAN

AT SW, NE LOWER WALLS: FACÁDE PLATE, THIS SIDE. SEE WF29

AT BRIDGE DECK EXTENSIONS: FACÁDE PLATES ARE SEPARATE. SEE WF28

AT NW, SE LOWER WALLS: FACÁDE PLATE, THIS SIDE. SEE WF29

NOTES:

1. BRACKET - TYPE 1 IS LOCATED ON C-17-FX, C-17-FXA BRIDGE DECK OVERHANG EXTENSIONS, AND ON LOWER WALLS. ON LOWER WALLS, FACÁDE PLATE IS CONNECTED TO BRACKET BASE PLATE.
2. PLATES SHALL CONFORM TO AASHTO M-270 GRADE 50 (ASTM A709 GRADE 50).
3. BRACKETS SHALL BE PAINTED PER SPEC 509. TOP COAT COLOR SHALL BE COLOR AMS-STD 30063.
4. BRACKETS ARE PART OF CORNER MONUMENTS PAY ITEM.

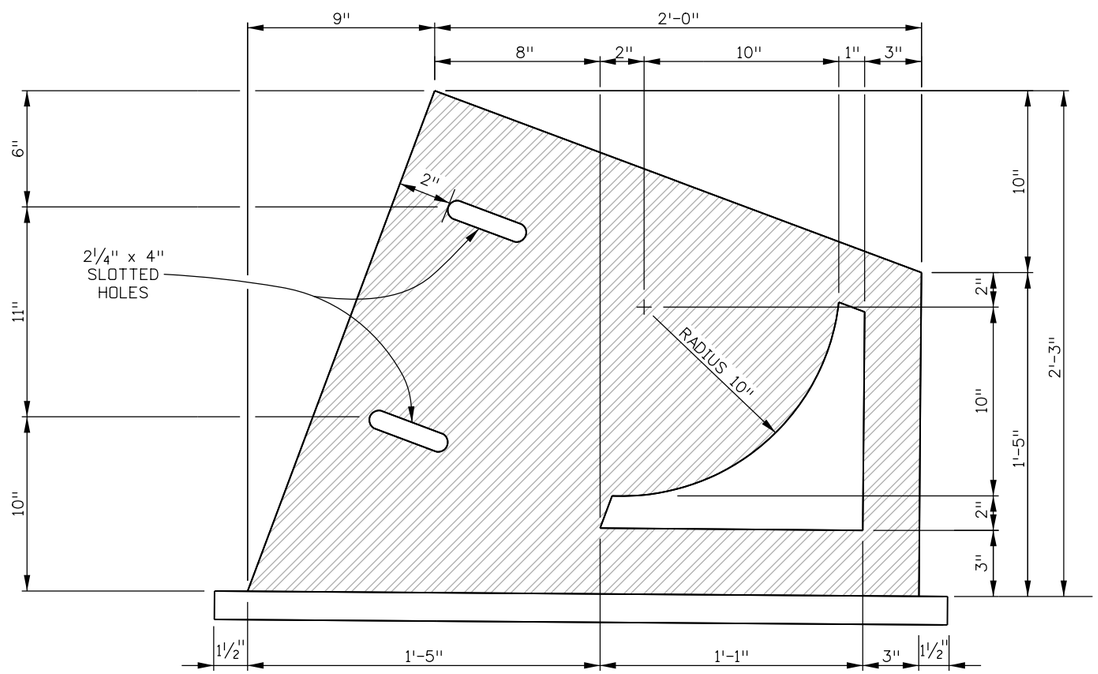

ELEVATION

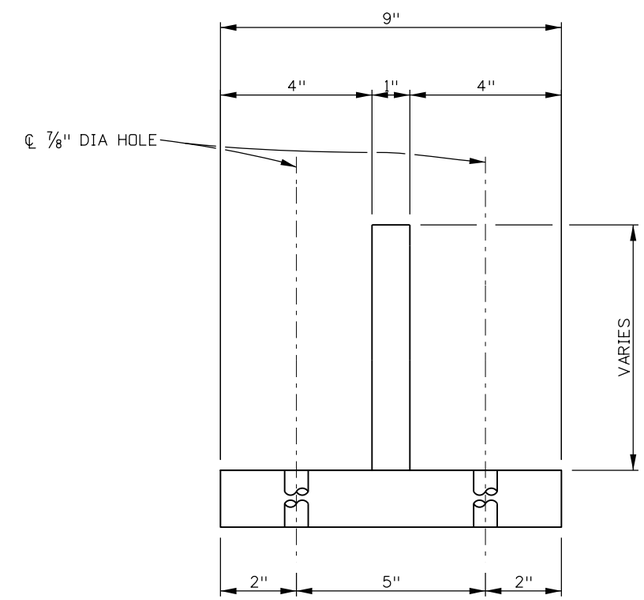

SECTION A

** LOWER WALL STRUCTURE NUMBERS
SW R025A252231 LRA
NW R025A252263LRA
SE R025A252240RRA
NE R025A252261 RRA

BRACKET DETAIL

Design	INITIAL	DATE	Detail	INITIAL	DATE	Quantities	INITIAL	DATE
Designed By	MRW	11/20	Detailed By	DRG	11/20	Quantities By	DMA	8/21
Checked By	AAD	8/21	Checked By	AAD	8/21	Checked By	AAD	8/21

Gonzales 10:36:32 AM pw:\\mulleren-pw.bentley.com:mulleren-pw-01\Documents\2012 Projects\12-003 I-25 SH 66 to SH 402\CP5\Bridge\RockSol\Drawings\23019_CP5_WF26_Bracket_Type_1.dgn

10/12/2021 CDOT_PDF - High Quality_ORD.pltcfg PEN-RockSol.tbl

Print Date: 10/12/2021
File Name: 23019_CP5_WF26_Bracket_Type_1.dgn
Horiz. Scale: 1:0.5 Vert. Scale: As Noted
Staff Bridge Branch: Unit 0222 Unit Leader: AAH
Sub-consultant RockSol Consulting Group, Inc.

Sheet Revisions		
Date:	Comments	Init.

Colorado Department of Transportation
1050 Lee Hill Road
Boulder, CO 80302
Phone: 303-546-5676
FAX: 303-444-0751
Region 4 ALG

As Constructed
No Revisions:
Revised:
Void:

I-25 EXPR. LANES SEG 5&6 CP5
BRACKET - TYPE 1

Designer: M. MERKLINGER	Structure Numbers	C-17-FX	
Detailer: D. GONZALES		C-17-FXA **	
Sheet Subset: WALL	Subset Sheets: WF26		

Project No./Code
NHPP 0253-275
23019
Sheet Number 38

RFC SUBMITTAL - NOT FOR CONSTRUCTION - OCTOBER 25, 2021

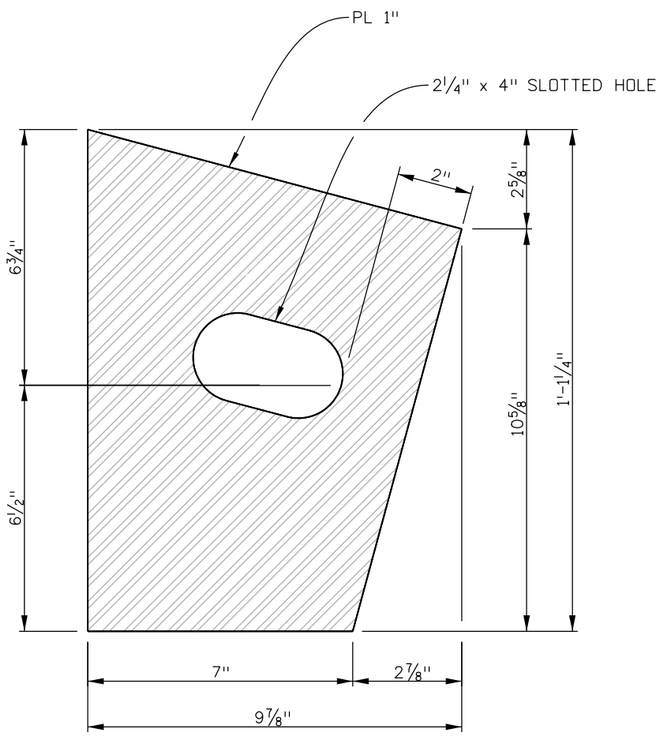

ELEVATION

NOTES:

1. BRACKET - TYPE 2 IS LOCATED ON CORNER MONUMENTS.
2. PLATES SHALL CONFORM TO AASHTO M-270 GRADE 50 (ASTM A709 GRADE 50).
3. BRACKETS SHALL BE PAINTED PER SPEC 509. TOP COAT COLOR SHALL BE COLOR AMS-STD 30063.
4. BRACKETS ARE PART OF CORNER MONUMENTS PAY ITEM.

*** CORNER MONUMENT STRUCTURE NUMBERS
SW R025A252234LRA
NW R025A252262LRA
SE R025A252239RRA
NE R025A252262RRA

BRACKET DETAIL

RFC SUBMITTAL - NOT FOR CONSTRUCTION - OCTOBER 25, 2021

Design	INITIAL	DATE	Detail	INITIAL	DATE	Quantities	INITIAL	DATE
Designed By	MRM	8/21	Detailed By	DRG	8/21	Quantities By	DMA	8/21
Checked By	AAD	8/21	Checked By	AAD	8/21	Checked By	AAD	8/21

Gonzales 9:17:13 AM pw:\\mulleren-pw.bentley.com:mulleren-pw-01\Documents\2012 Projects\12-003 I-25 SH 66 to SH 402\CP5\Bridge\RockSol\Drawings\23019_CP5_WF27_Bracket_Type_2.dgn

8/24/2021 CDOT-PDFHighQuality_V8i.pltcfg CDOT-PenTable.tbl

Print Date: 8/24/2021
File Name: 23019_CP5_WF27_Bracket_Type_2.dgn
Horiz. Scale: 1:0.5 Vert. Scale: As Noted
Staff Bridge Branch: Unit 0222 Unit Leader: AAH
Sub-consultant RockSol Consulting Group, Inc.

Sheet Revisions		
Date:	Comments	Init.

Colorado Department of Transportation
1050 Lee Hill Road
Boulder, CO 80302
Phone: 303-546-5676
FAX: 303-444-0751
Region 4 ALG

As Constructed
No Revisions:
Revised:
Void:

I-25 EXPR. LANES SEG 5&6 CP5
BRACKET - TYPE 2

Designer: M. MERKLINGER
Detailer: D. GONZALES
Sheet Subset: WALL
Structure Numbers ***
Subset Sheets: WF27

Project No./Code
NHPP 0253-275
23019
Sheet Number 39

LOCATION	℄ BRACKET Θ =
SW	108° 30'
NW	71° 30'
SE	71° 30'
NE	108° 30'

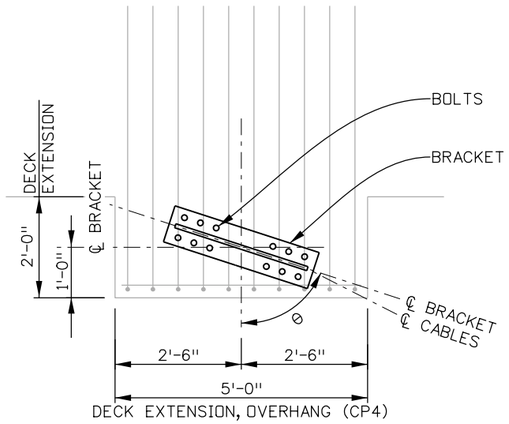

PLAN

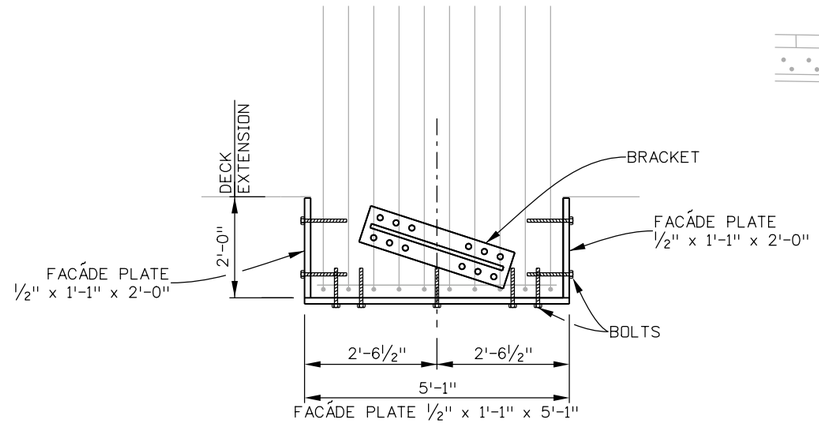

PLAN

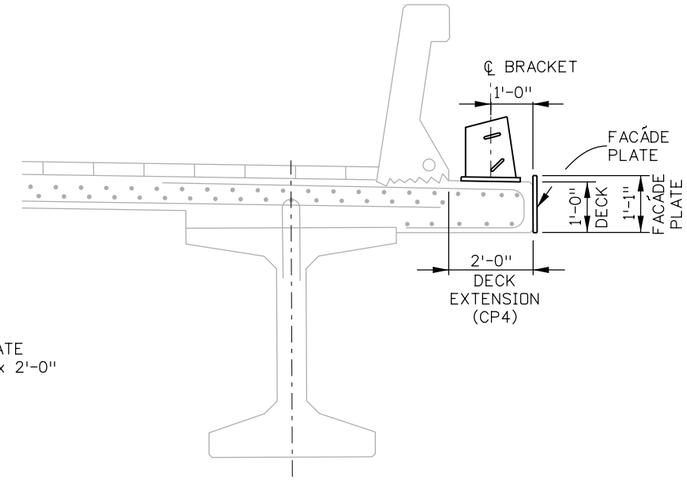

SECTION A

NOTES

1. ALL INSTALLED METAL COMPONENTS (INCLUDING VISIBLE PORTIONS OF INSTALLED BOLTS) SHALL BE PAINTED PER SPEC 509. TOP COAT COLOR SHALL BE COLOR AMS-STD 30063.
2. BOLTS SHALL BE 3/4" x 6" CONFORMING TO ASTM A-325.
3. BOLTS SHALL BE SECURED BY EPOXY IN 1-1/4" ø x 6" DEEP HOLE DRILLED OR CORED.
4. ALTERNATE BOLTS AND/OR ANCHORAGE METHOD WITH SIMILAR STRENGTH MAY BE PROPOSED FOR SUBSTITUTION.
5. CLEVIS AND 1.5" DIAMETER STEEL CABLE SHALL CONNECT BRACKET - TYPE 1 TO BRACKET - TYPE 2, AS SHOWN IN URBAN DESIGN PLANS.
6. BRACKETS, FACÁDE PLATES, BOLTS, CLEVICES, AND CABLES ARE PART OF CORNER MONUMENTS PAY ITEM.

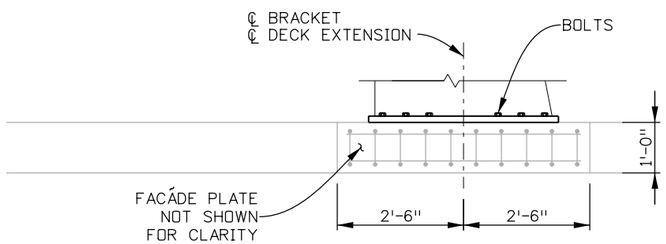

ELEVATION

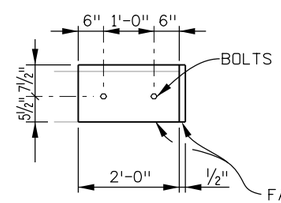

ELEVATION
SHORT SIDE

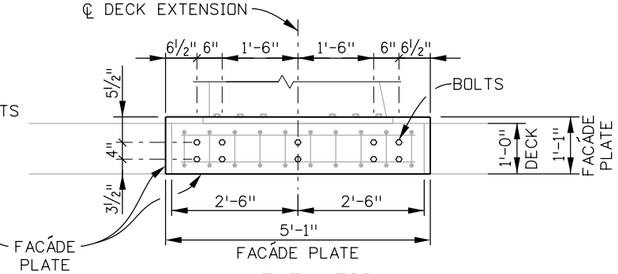

ELEVATION
LONG SIDE

BRACKET LAYOUT

FACÁDE PLATES

Print Date: 8/24/2021			
File Name: 23019_CP5_WF28_Installation_on_Superstructure.dgn			
Horiz. Scale: 1:1	Vert. Scale: As Noted		
Staff Bridge Branch: Unit 0222	Unit Leader: AAH		
Sub-consultant RockSol Consulting Group, Inc.			

Sheet Revisions		
Date:	Comments	Init.

Colorado Department of Transportation
1050 Lee Hill Road
Boulder, CO 80302
Phone: 303-546-5676
FAX: 303-444-0751
Region 4 ALG

As Constructed
No Revisions:
Revised:
Void:

I-25 EXPR. LANES SEG 5&6 CP5
INSTALLATION ON SUPERSTRUCTURE

Designer: M. MERKLINGER		Structure Numbers	C-17-FX
Detailer: D. GONZALES			C-17-FXA
Sheet Subset: WALL		Subset Sheets: WF28	

Project No./Code
NHPP 0253-275
23019
Sheet Number 40

RFC SUBMITTAL - NOT FOR CONSTRUCTION - OCTOBER 25, 2021

Design			Detail			Quantities		
	INITIAL	DATE		INITIAL	DATE		INITIAL	DATE
Designed By	MRM	11/20	Detailed By	DRG	11/20	Quantities By	DMA	8/21
Checked By	AAD	8/21	Checked By	AAD	8/21	Checked By	AAD	8/21

Gonzales 9:20:53 AM pw:\\mullereng-pw.bentley.com:mullereng-pw-01\Documents\2012 Projects\12-003 I-25 SH 66 to SH 402\CP5\Bridge\RockSol\Drawings\23019_CP5_WF28_Installation_on_Superstructure

8/24/2021 CDOT-PDFHighQuality_V8i.pltcfg CDOT-PenTable.tbl

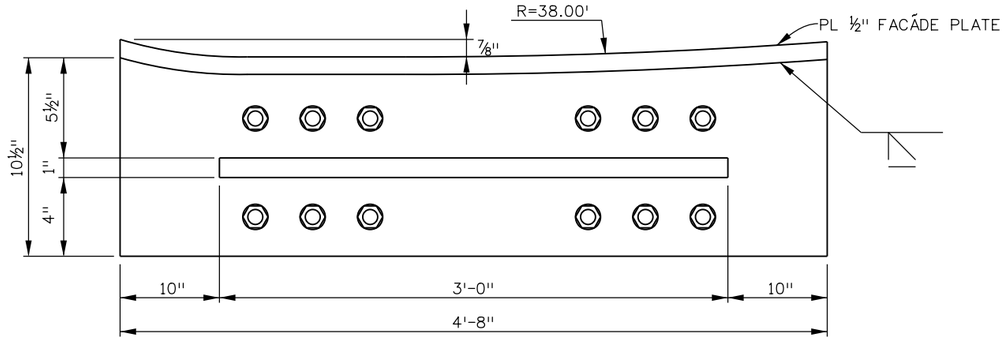

PLAN

SW, NE SHOWN. SE, NW FACÁDE PLATE OPPOSITE SIDE
N.T.S.

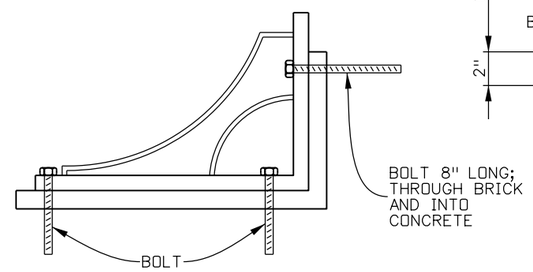

FASTENING DECORATIVE BRACKETS

N.T.S.

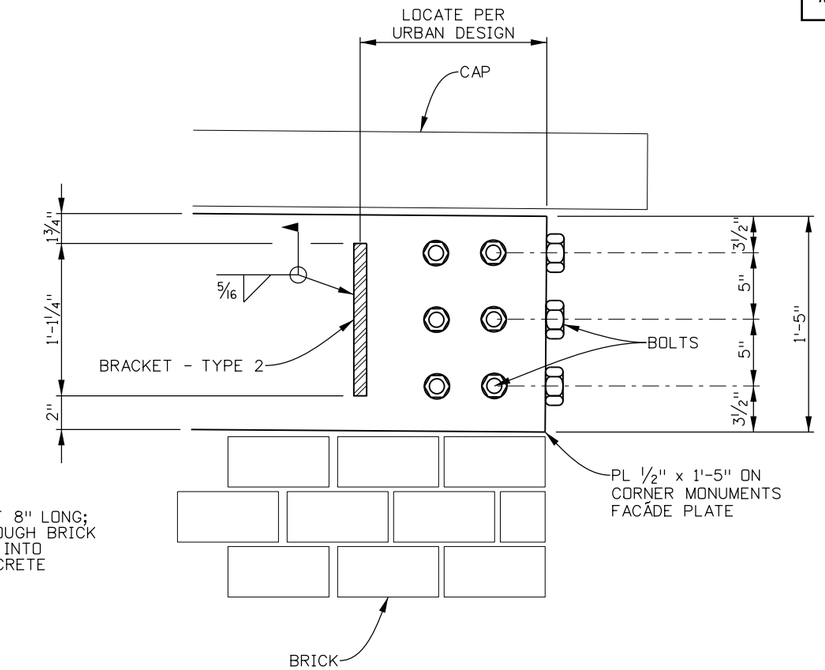

ELEVATION

N.T.S.

INSTALLATION ON TOWERS
PORTION OF CORNER MONUMENTS
*** STRUCTURE NUMBERS
SW R025A252234LRA
NW R025A252262LRA
SE R025A252239RRA
NE R025A252262RRA

CONNECTIONS ON CORNER MONUMENTS

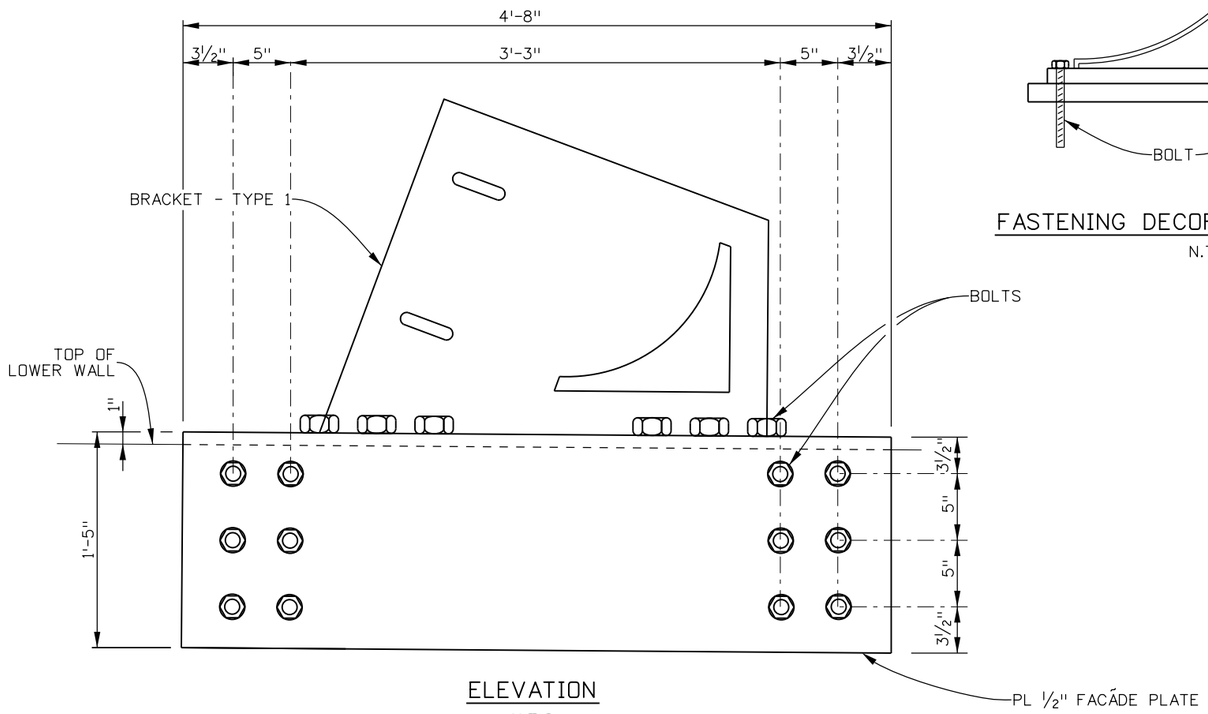

ELEVATION

N.T.S.

INSTALLATION ON LOWER WALLS
** STRUCTURE NUMBERS
SW R025A252231LRA
NW R025A252263LRA
SE R025A252240RRA
NE R025A252261RRA

BRACKET - TYPE 1 ON LOWER WALLS

NOTES

1. ALL INSTALLED METAL COMPONENTS (INCLUDING VISIBLE PORTIONS OF INSTALLED BOLTS) SHALL BE PAINTED PER SPEC 509 WITH POWDER COATING. TOP COAT COLOR SHALL BE COLOR AMS-STD 30063.
2. BOLTS SHALL BE 3/4" x 6" CONFORMING TO ASTM A-325. LONGER BOLTS WHERE IDENTIFIED.
3. BOLTS SHALL BE SECURED BY EPOXY IN 1-1/4" ø x 6" DEEP HOLE DRILLED OR CORED. DEEPER HOLE FOR LONG BOLTS.
4. ALTERNATE BOLTS AND/OR ANCHORAGE METHOD WITH SIMILAR STRENGTH MAY BE PROPOSED FOR SUBSTITUTION.
5. CLEVICE AND 1.5" DIAMETER STEEL CABLE SHALL CONNECT BRACKET - TYPE 1 TO BRACKET - TYPE 2, AS SHOWN IN URBAN DESIGN PLANS.
6. BRACKETS, FACÁDE PLATES, BOLTS, CLEVICES, AND CABLES ARE PART OF CORNER MONUMENTS PAY ITEM.

RFC SUBMITTAL - NOT FOR CONSTRUCTION - OCTOBER 25, 2021

Print Date: 10/12/2021		Sheet Revisions		
File Name: 23019_CP5_WF29_Install_on_Corner_Monuments.dgn		Date:	Comments	Init.
Horiz. Scale: 1:0.5	Vert. Scale: As Noted			
Staff Bridge Branch: Unit 0222	Unit Leader: AAH			
Sub-consultant RockSol Consulting Group, Inc.				

Colorado Department of Transportation
1050 Lee Hill Road
Boulder, CO 80302
Phone: 303-546-5676
FAX: 303-444-0751
Region 4 ALG

As Constructed	I-25 EXPR. LANES SEG 5&6 CP5 INSTALLATION ON LOWER WALLS AND CORNER MONUMENTS		Project No./Code
No Revisions:			NHPP 0253-275
Revised:	Designer: M. MERKLINGER	Structure Numbers **	23019
Void:	Detailer: D. GONZALES	***	
	Sheet Subset: WALL	Subset Sheets: WF29	Sheet Number 4

Design						Detail						Quantities		
	INITIAL	DATE		INITIAL	DATE		INITIAL	DATE		INITIAL	DATE		INITIAL	DATE
Designed By	MRM	8/21	Detailed By	DRG	8/21	Quantities By	DMA	8/21						
Checked By	AAD	8/21	Checked By	AAD	8/21	Checked By	AAD	8/21						

Gonzales 3:04:40 PM pw:\\mullereng-pw.bentley.com:mullereng-pw-01\Documents\2012 Projects\12-003 I-25 SH 66 to SH 402\CP5\Bridge\RockSol\Drawings\23019_CP5_WF29_Install_on_Corner_Monuments.dgn

10/12/2021 CDOT_PDF - High Quality_ORD.pltcfg PEN-RockSol.tbl

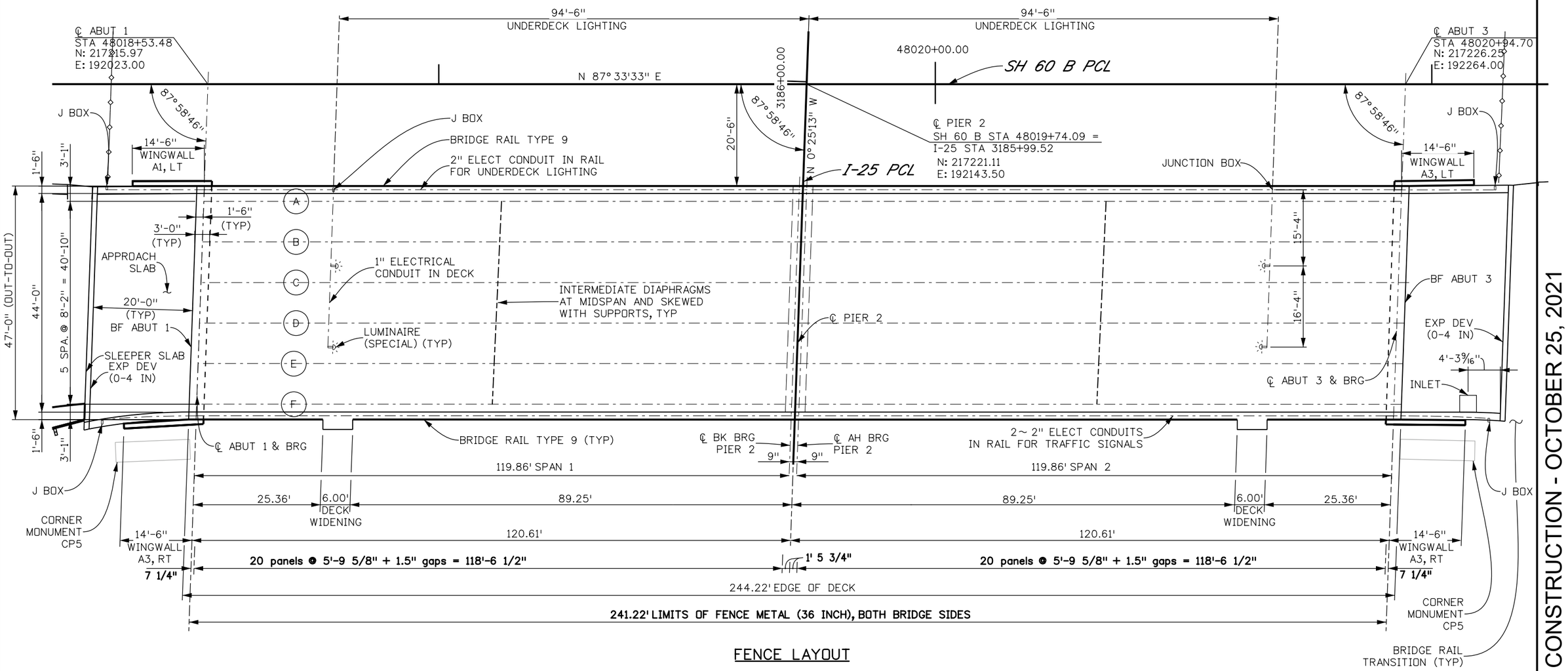

FENCE LAYOUT

THIS SHEET SHOWS EXTENT OF FENCE METAL (36 INCH) FOR CP5.
ALL OTHER INFORMATION IS FOR INFORMATION ONLY, AND IS
BASED ON CP4 PLANS.

RFC SUBMITTAL - NOT FOR CONSTRUCTION - OCTOBER 25, 2021

Design	INITIAL	DATE	Detail	INITIAL	DATE	Quantities	INITIAL	DATE
Designed By	AAD	7/20	Detailed By	SBA	7/20	Quantities By	AAD	9/21
Checked By	MRM	10/21	Checked By	MRM	8/20	Checked By	DMA	9/21

10/7/2021 CDOT_PDF - High Quality_ORD.pltcfg CDOT-PenTable.tbl

adams 8:05:48 AM pw:\\mullereng-pw.bentley.com:mullereng-pw-01\Documents\2012 Projects\12-003 I-25 SH 66 to SH 402\CP5\Bridge\RockSol\Drawings\23019_CP5_WF30_Fence Layout C-17-FX.dgn

Print Date: 10/7/2021	
File Name: 23019_CP5_WF30_Fence Layout C-17-FX.dgn	
Horiz. Scale: 1:20	Vert. Scale: As Noted
Unit Information: 0222	Unit Leader: AAH
Sub-consultant RockSol Consulting Group, Inc.	

Sheet Revisions

Date:	Comments	Init.

Colorado Department of Transportation
1050 Lee Hill Road
Boulder, CO 80302
Phone: 303-546-5676
FAX: 303-444-0751
Region 4 ALG

As Constructed
No Revisions:
Revised:
Void:

I-25 EXPR. LANES SEG 5&6 CP5
FENCE LAYOUT C-17-FX

Designer:	A. DADA	Structure Numbers	C-17-FX
Detailer:	S. AUSTIN		
Sheet Subset:	WALL	Subset Sheets: WF30 of	

Project No./Code
NHPP 0253-275
23019
Sheet Number 41

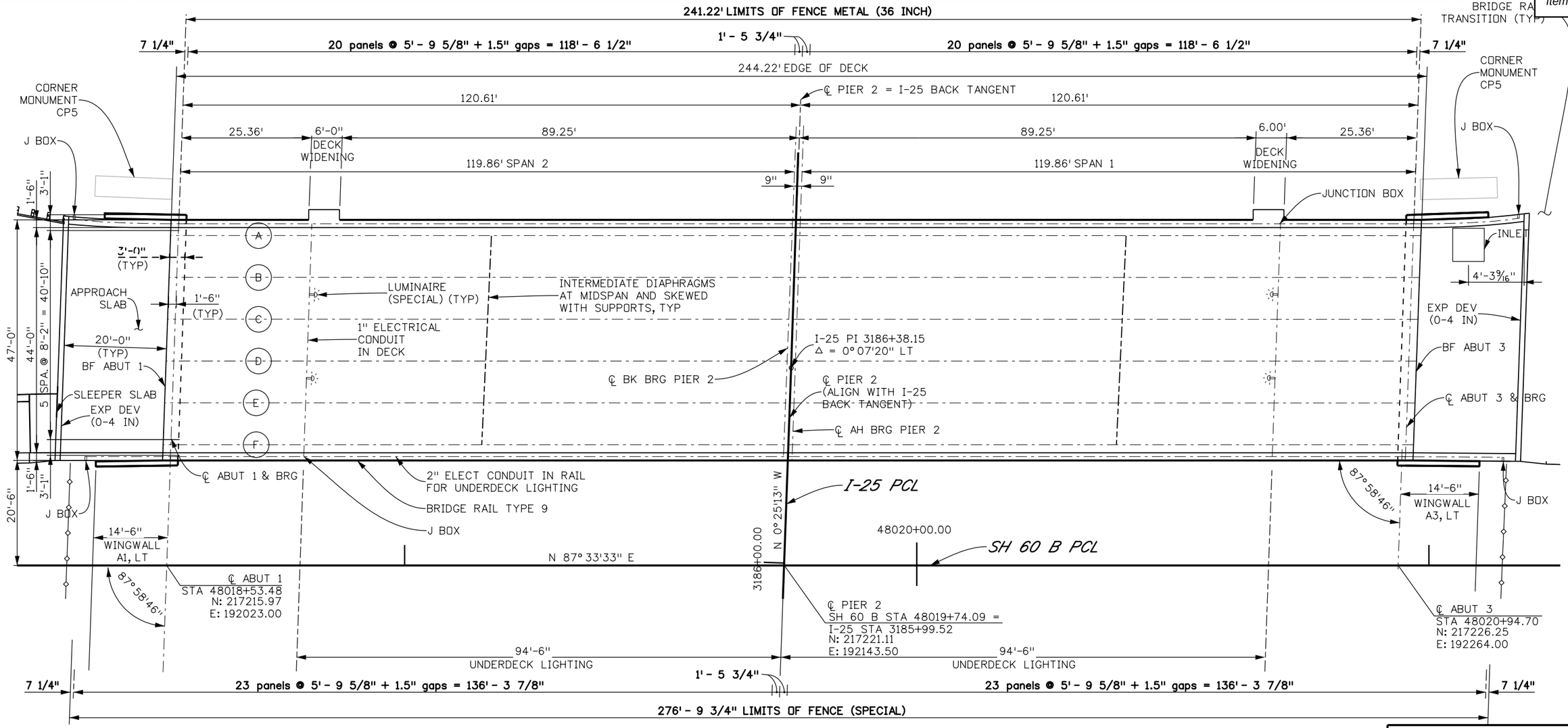

FENCE LAYOUT

THIS SHEET SHOWS EXTENT OF FENCE METAL (36 INCH) AND FENCE (SPECIAL) FOR CP5.
ALL OTHER INFORMATION IS FOR INFORMATION ONLY, AND IS BASED ON CP4 PLANS.

Design			Detail			Quantities		
	INITIAL	DATE		INITIAL	DATE		INITIAL	DATE
Designed By	AAD	7/20	Detailed By	SBA	7/20	Quantities By	AAD	9/21
Checked By	MRM	10/21	Checked By	MRM	7/20	Checked By	DMA	9/21

pw:\\mulleren g-pw.bentley.com:mullereng-pw-01\Documents\2012 Projects\12-003 I-25 SH 66 to SH 402\CP5\Bridge\RockSol\Drawings\23019_CP5_WF31_Fence Layout C-17-FXA.dgn
CDOT_PDF - High Quality_ORD.pltcfg CDOT-PenTable.tbl
adams 8:08:18 AM
10/7/2021

Print Date: 10/7/2021
Drawing File Name: 23019_CP5_WF31_Fence Layout C-17-FXA.dgn
Horiz. Scale: 1:20 Vert. Scale: As Noted
Unit Information: 0222 Unit Leader: AAH
Sub-consultant RockSol Consulting Group, Inc.

Sheet Revisions		
Date:	Comments	Init.

Colorado Department of Transportation
1050 Lee Hill Road
Boulder, CO 80302
Phone: 303-546-5676
FAX: 303-444-0751
Region 4 ALG

As Constructed
No Revisions:
Revised:
Void:

I-25 EXPR. LANES SEG 5&6 CP5
FENCE LAYOUT C-17-FXA
Designer: A. DADA
Detailer: S. AUSTIN
Sheet Subset: WALL
Structure Numbers: C-17-FXA
Subset Sheets: WF31of

Project No./Code
NHPP 0253-275
23019
Sheet Number 43

RFC SUBMITTAL - NOT FOR CONSTRUCTION - OCTOBER 25, 2021

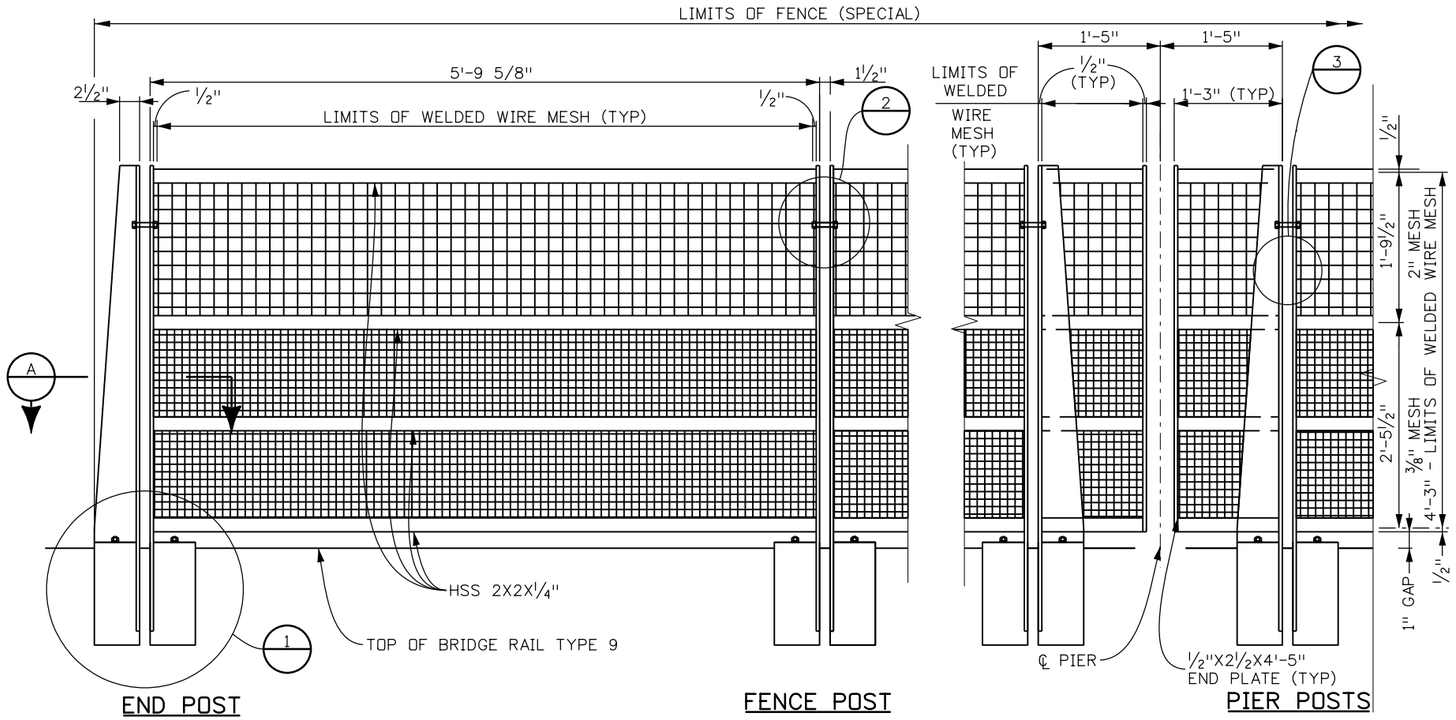

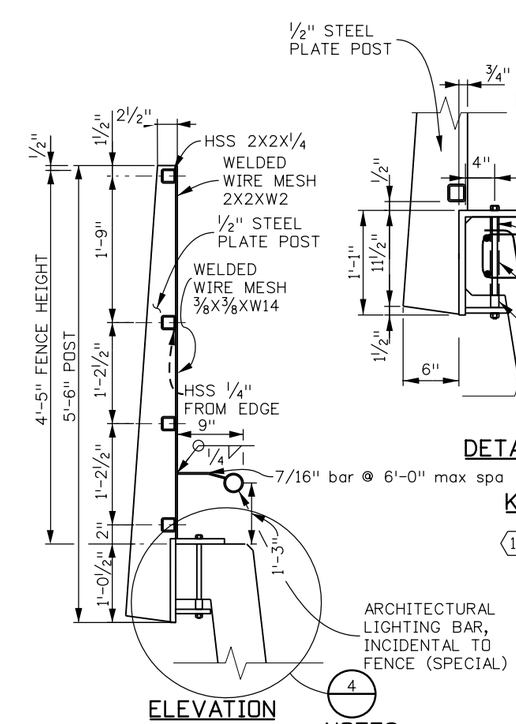

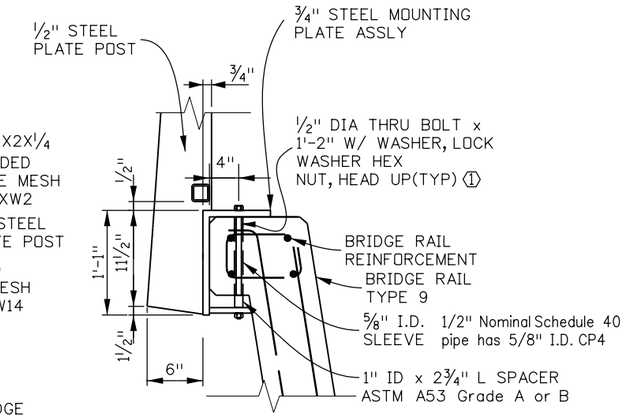

KEY NOTES

1. ALL THROUGH BOLT LOCATIONS SHALL BE PRE-DETERMINED AND SLEEVE SHALL BE CAST INTO THE BRIDGE RAIL DURING FABRICATION. BOLTS SHALL BE TENSIONED PER THE REQUIREMENTS OF SPECIFICATIONS SECTION 509.28

NOTES

1. STEEL SHALL BE GALVANIZED AND POWDER COATED IN ACCORDANCE WITH SECTION 509. COLOR SHALL CONFORM TO COLOR AMS-STD 30063
2. ALL TUBES SHALL BE ASTM A-500 GRADE B. ALL PLATES SHALL BE ASTM A-709 GRADE 50. ALL OTHER STEEL SHALL BE ASTM A-36 UNLESS OTHERWISE NOTED.
3. TOP AND BOTTOM OF RAIL SHALL FOLLOW THE LONGITUDINAL GRADE OF THE BRIDGE. POST SHALL BE PLUMB.
4. ALL BOLTS SHALL BE ½"Ø BOLTS UNLESS OTHERWISE NOTED. ALL BOLTS SHALL BE STAINLESS STEEL CONFORMING TO ASTM F593.

DESIGN DATA

LIVE LOAD:
WIND LOAD = 25 PSF (MESH)

SNOW LOAD = 96 PLF @ 1'-6" FROM TOP OF BRIDGE RAIL

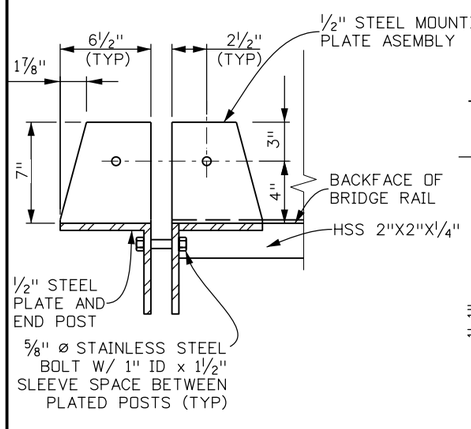

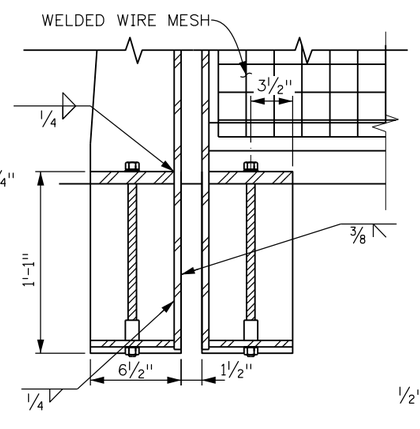

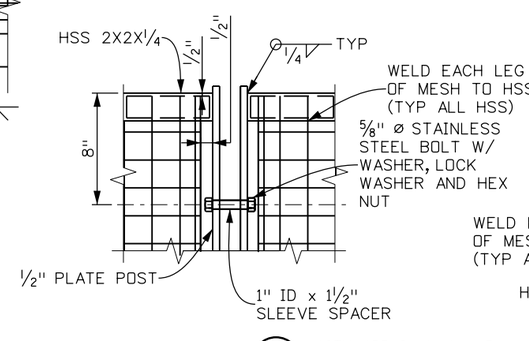

ASTM A53 Grade A or B. 1" Nominal Schedule 40 pipe has 1" I.D.

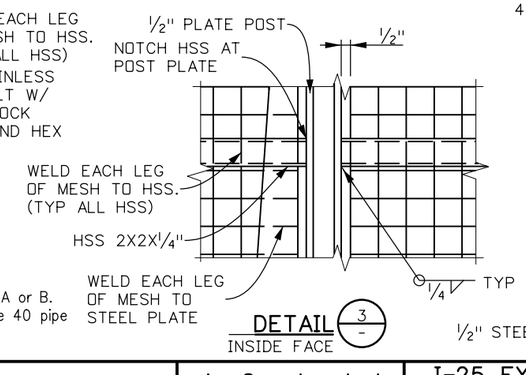

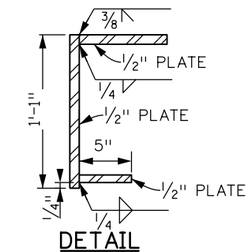

Design			Detail			Quantities		
	INITIAL	DATE		INITIAL	DATE		INITIAL	DATE
Designed By	AAD	9/21	Detailed By	SBA	8/21	Quantities By	AAD	9/21
Checked By	MRM	9/21	Checked By	MRM	8/21	Checked By	MRM	9/21

10/11/2021 CDOT_PDF - High Quality_ORD.pltcfg N-RockSol.tbl

Gonzales 2:39:25 PM pw:\\mullereng-pw.bentley.com:mullereng-pw-01\Documents\2012 Projects\12-003 I-25 SH 66 to SH 402\CP5\Bridge\RockSol\Drawings\23019_CP5_WF32_Fence (Special).dgn

Print Date: 10/11/2021			
File Name: 23019_CP5_WF32_Fence (Special).dgn			
Horiz. Scale: 1:1	Vert. Scale: As Noted		
Unit Information: 0222	Unit Leader: AAH		
Sub-consultant RockSol Consulting Group, Inc.			

Sheet Revisions

Date:	Comments	Init.

Colorado Department of Transportation
1050 Lee Hill Road
Boulder, CO 80302
Phone: 303-546-5676
FAX: 303-444-0751
Region 4 ALG

As Constructed
No Revisions:
Revised:
Void:

I-25 EXPR. LANES SEG 5&6 CP5
FENCE (SPECIAL)

Designer:	A. DADA	Structure Numbers	C-17-FXA
Detailer:	A. DADA		
Sheet Subset:	WALL	Subset Sheets:	WF32

Project No./Code
NHPP 0253-275
23019
Sheet Number 44

RFC SUBMITTAL - NOT FOR CONSTRUCTION - OCTOBER 25, 2021

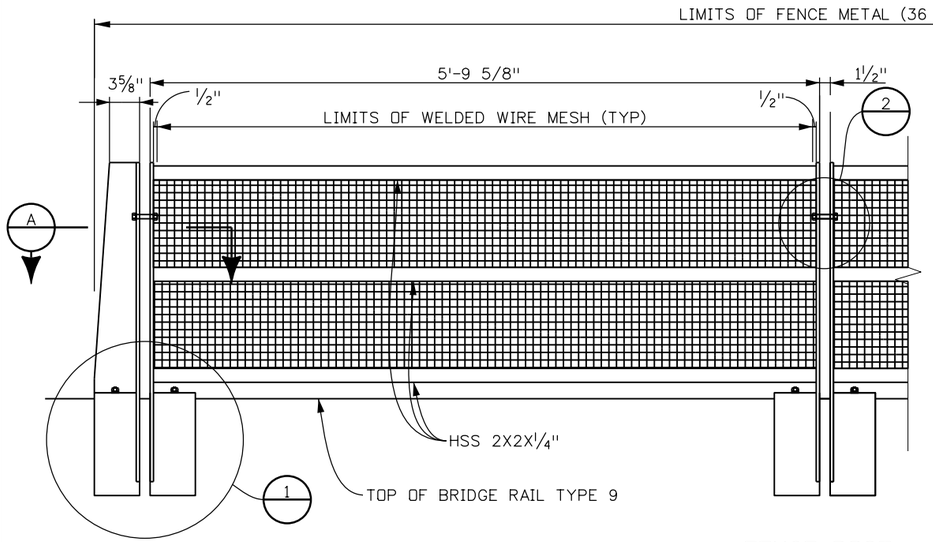

END POST

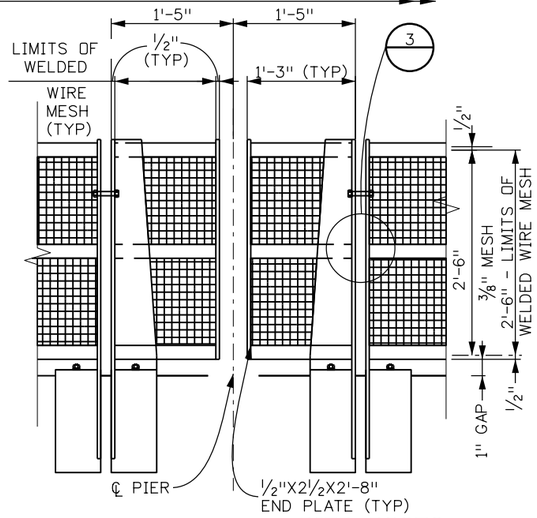

FENCE POST

(VIEW SHOWN AT OUTSIDE FACE OF FENCE)

PIER POSTS

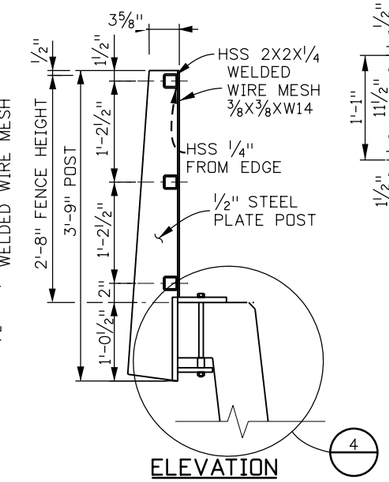

ELEVATION

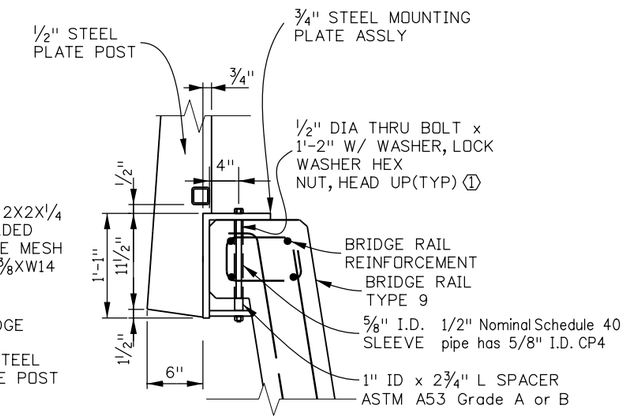

DETAIL 4

KEY NOTES

1. ALL THROUGH BOLT LOCATIONS SHALL BE PRE-DETERMINED AND SLEEVE SHALL BE CAST INTO THE BRIDGE RAIL DURING FABRICATION. BOLTS SHALL BE TENSIONED PER THE REQUIREMENTS OF SPECIFICATIONS SECTION 509.28

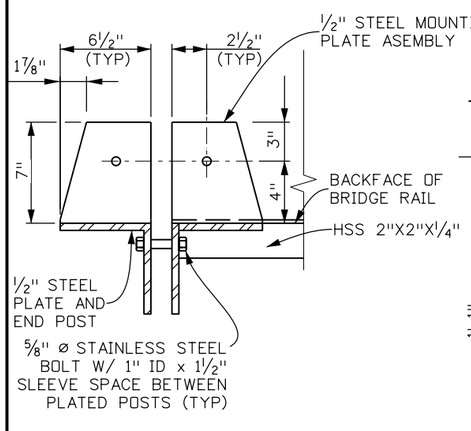

SECTION A

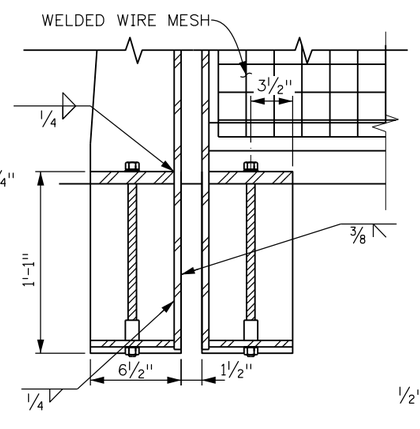

DETAIL 1
INSIDE FACE

DESIGN DATA

LIVE LOAD:
WIND LOAD = 25 PSF (MESH)

SNOW LOAD = 96 PLF @ 1'-6" FROM TOP OF BRIDGE RAIL

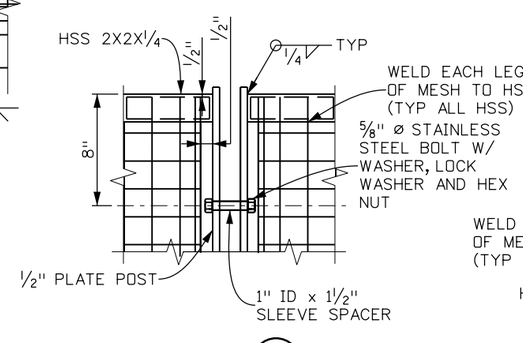

DETAIL 2
INSIDE FACE

ASTM A53 Grade A or B. 1" Nominal Schedule 40 pipe has 1" I.D.

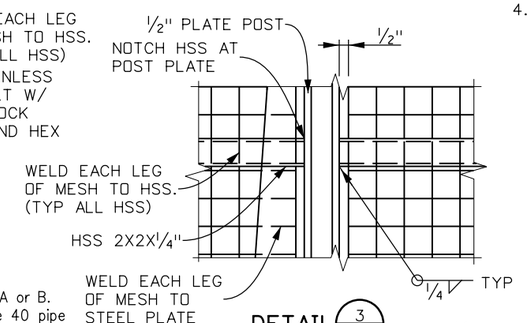

DETAIL 3
INSIDE FACE

NOTES

1. STEEL SHALL BE GALVANIZED AND POWDER COATED IN ACCORDANCE WITH SECTION 509. COLOR SHALL CONFORM TO COLOR AMS-STD 30063
2. ALL TUBES SHALL BE ASTM A-500 GRADE B. ALL PLATES SHALL BE ASTM A-709 GRADE 50. ALL OTHER STEEL SHALL BE ASTM A-36 UNLESS OTHERWISE NOTED.
3. TOP AND BOTTOM OF RAIL SHALL FOLLOW THE LONGITUDINAL GRADE OF THE BRIDGE. POST SHALL BE PLUMB.
4. ALL BOLTS SHALL BE ½"⌀ BOLTS UNLESS OTHERWISE NOTED. ALL BOLTS SHALL BE STAINLESS STEEL CONFORMING TO ASTM F593.

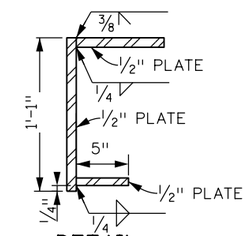

DETAIL
½" STEEL MOUNTING PLATE ASSEMBLY

Print Date: 10/11/2021		Sheet Revisions		
File Name: 23019_CP5_WF33_Fence Metal(36 Inch).dgn		Date:	Comments	Init.
Horiz. Scale: 1:1	Vert. Scale: As Noted			
Unit Information: 0222	Unit Leader: AAH			
Sub-consultant RockSol Consulting Group, Inc.				

Colorado Department of Transportation
1050 Lee Hill Road
Boulder, CO 80302
Phone: 303-546-5676
FAX: 303-444-0751
Region 4 ALG

As Constructed
No Revisions:
Revised:
Void:

I-25 EXPR. LANES SEG 5&6 CP5
FENCE METAL (36 INCH)

Designer:	A. DADA	Structure Numbers	C-17-FX
Detailer:	A. DADA		C-17-FXA
Sheet Subset:	WALL	Subset Sheets: WF33	

Project No./Code
NHPP 0253-275
23019
Sheet Number 45

Design			Detail			Quantities		
	INITIAL	DATE		INITIAL	DATE		INITIAL	DATE
Designed By	AAD	9/21	Detailed By	AAD	9/21	Quantities By	AAD	9/21
Checked By	MRM	9/21	Checked By	MRM	9/21	Checked By	DMA	9/21

10/11/2021 CDOT_PDF - High Quality_ORD.pltcfg N-RockSol.tbl

Gonzales 2:45:15 PM pw:\\mullereng-pw.bentley.com:mulleren-pw-01\Documents\2012 Projects\12-003 I-25 SH 66 to SH 402\CP5\Bridge\RockSol\Drawings\23019_CP5_WF33_Fence Metal(36 Inch).dgn

RFC SUBMITTAL - NOT FOR CONSTRUCTION - OCTOBER 25, 2021

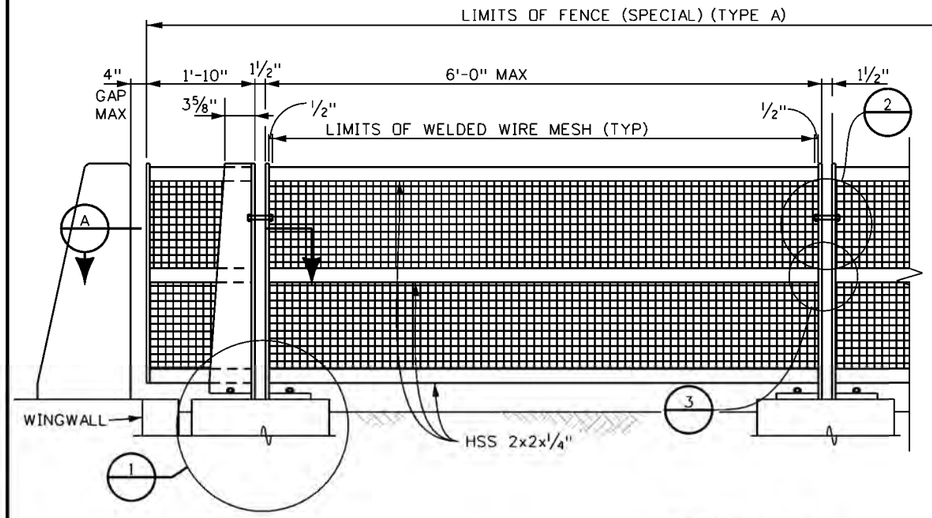

END POST

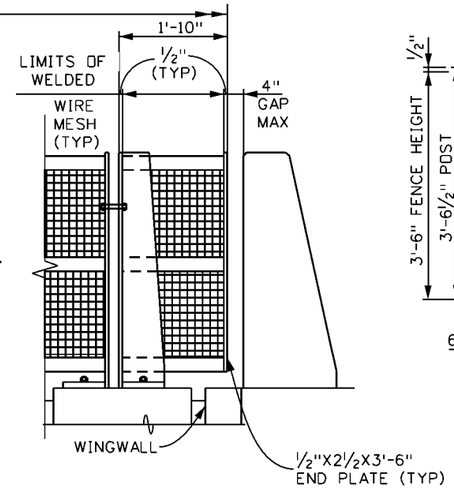

FENCE POST

(VIEW SHOWN AT OUTSIDE FACE OF FENCE)

END POSTS

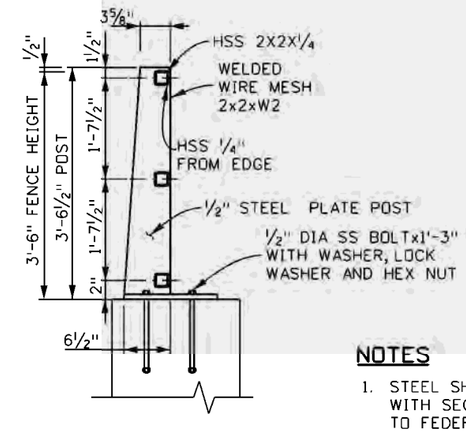

ELEVATION

ITEM CODE	ITEM	UNIT	QUANTITY
206-00000	STRUCTURE EXCAVATION	CY	6
601-01000	CONCRETE CLASS B	CY	6
602-00000	REINFORCING STEEL	LB	595
607-11530	FENCE (SPECIAL)(TYPE A)	LF	80.5

NOTES

1. STEEL SHALL BE GALVANIZED AND POWDER COATED IN ACCORDANCE WITH SECTION 522 - DUPLEX COATING SYSTEM. COLOR SHALL CONFORM TO FEDERAL COLOR NO. 30063.
2. ALL TUBES SHALL BE ASTM A-500 GRADE B. ALL PLATES SHALL BE ASTM A-709 GRADE 50. ALL OTHER STEEL SHALL BE ASTM A-36 UNLESS OTHERWISE NOTED.
3. TOP AND BOTTOM OF RAIL SHALL FOLLOW THE GRADE BETWEEN BRIDGE WINGWALLS. POST SHALL BE PLUMB.
4. ALL BOLTS SHALL BE ½"Ø BOLTS UNLESS OTHERWISE NOTED. ALL BOLTS SHALL BE STAINLESS STEEL CONFORMING TO ASTM F593.
5. CONCRETE SHALL BE CLASS B WITH f'c = 4,500 PSI. ALL REINFORCING SHALL BE NON-EPOXY COATED BLACK GRADE 60 BARS.

DESIGN DATA

LIVE LOAD:
WIND LOAD = 25 PSF (MESH)

PED LOAD = 50 PLF @ 200 LB CONCENTRATED

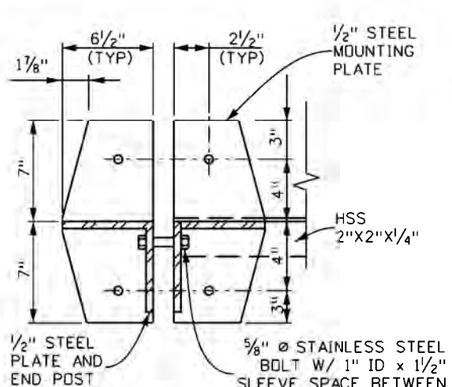

SECTION A

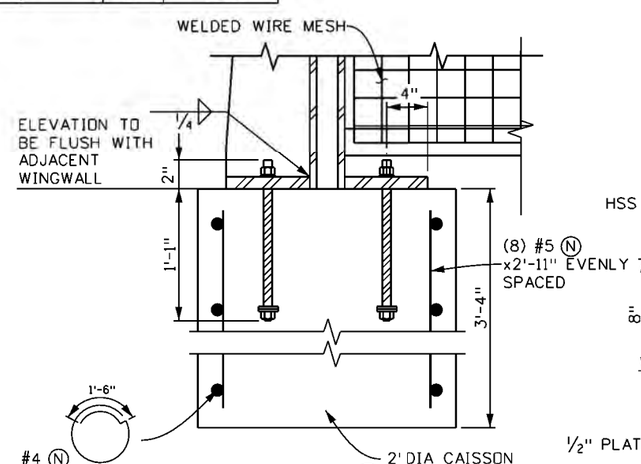

DETAIL 1
INSIDE FACE

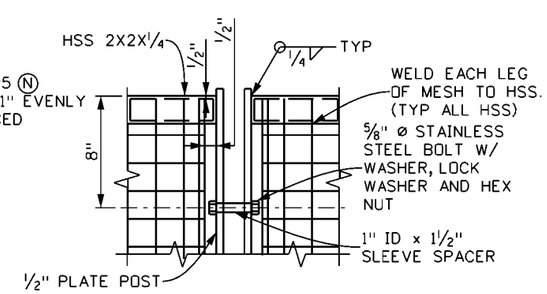

DETAIL 2
INSIDE FACE

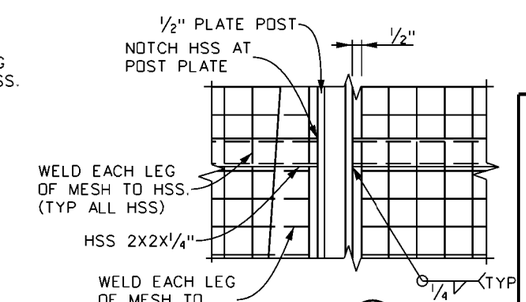

DETAIL 3
INSIDE FACE

811 Call before you dig. below

Print Date: 10/20/2021			
Drawing File Name: 23019_FENCE (SPECIAL) (TYPA A).dgn			
Horiz. Scale: 1:1	Vert. Scale: As Noted		
Unit Information	Unit Leader Initials		

Sheet Revisions

Date:	Comments	Init.

Colorado Department of Transportation
1050 Lee Hill Road
Boulder, CO 80302
Phone: 303-546-5676
FAX: 303-444-0751
Region 4 ALG

As Constructed
No Revisions:
Revised:
Void:

FENCE (SPECIAL) (TYPE A)

Designer:	J. SERA	Structure Numbers	
Detailer:	A. DARGAY		
Sheet Subset:		Subset Sheets:	of

Project No./Code
NHPP 0253-275
23019
Sheet Number 4

RFC SUBMITTAL - NOT FOR CONSTRUCTION - OCTOBER 25, 2021

adargay 10:34:38 AM pw:\\mullereng-pw.bentley.com:mulleren g-pw-01\Documents\2012 Projects\12-003 I-25 SH 66 to SH 402\CPS\Bridge\Muller\Drawings\23019_FENCE (SPECIAL) (TYPA A).dgn
10/20/2021 CDOT-DetaultPrinter_V8i.pltcfg MEC-Standard.tbl

TABULATION OF LANDSCAPE ARCHITECTURE ITEMS (FIO)

ITEM NO	DESCRIPTION	UNIT	QUANTITY	COMMENTS
212-00706	SEEDING (NATIVE) DRILL (TYPE 1)	ACRE	1.06	
212-00706	SEEDING (NATIVE) DRILL (TYPE 2)	ACRE	0.42	
213-00300	CONCRETE LANDSCAPE BORDER	LF	3,902	
214-00220	DECIDUOUS TREE (2 INCH CALIPER)	EACH	8	
304-06007	AGGREGATE BASE COURSE (CLASS 6)	CY	3	
601-01000	CONCRETE CLASS B	CY	46	
602-00000	REINFORCING STEEL	LB	2,990	
609-71000	CURB (SPECIAL)	LF	1,600	
610-00030	MEDIAN COVER MATERIAL (CONCRETE)	SF	11,308	
622-00155	PLANTER BOX (SPECIAL) (TYPE 1)	EACH	5	
622-00155	PLANTER BOX (SPECIAL) (TYPE 2)	EACH	5	
622-00155	PLANTER BOX (SPECIAL) (TYPE 3)	EACH	10	
622-00155	PLANTER BOX (SPECIAL) (TYPE 4)	EACH	4	
622-00155	PLANTER BOX (SPECIAL) (TYPE 5)	EACH	2	

NOT TABULATED WITH CP5 QUANTITIES - FOR INFORMATION ONLY

ITEM NO	DESCRIPTION	UNIT	QUANTITY	COMMENTS
207-00205	TOPSOIL	CY	505	
212-00032	SOIL CONDITIONING	ACRE	0.62	

RFC SUBMITTAL - NOT FOR CONSTRUCTION - OCTOBER 25, 2021

XXX MM/YY
XXX MM/YY
XXX MM/YY
XXX MM/YY
XXX MM/YY
XXX MM/YY
$PENTBLS$
$PLTDRVS$
$PLOT_INFO$
$DATE$

Print Date: 09/13/2021
Drawing File Name:
Horiz. Scale: Vert. Scale: As Noted
Unit Information Unit Leader Initials

BHA Design Incorporated
1603 Oakridge Drive
Fort Collins, Colorado 80525
voice: 970.223.7577
www.bhadesign.com

Sheet Revisions

Date:	Comments	Init.

Colorado Department of Transportation
1050 Lee Hill Road
Boulder, CO 80302
Phone: 303-546-5676
FAX: 303-444-0751
Region 4 ALG

As Constructed
No Revisions:
Revised: REVISED
Void: VOID

I-25 EXPR. LANES SEG 5&6 CP5
URBAN DESIGN ELEMENTS
QUANTITIES

Designer: MCB
Detailer: MCB
Sheet Subset: URBAN DSGN
Structure Numbers: C-17-FX, C-17-FXA
Subset Sheets: UD1.0

Project No./Code
NHPP 0253-275
23019
Sheet Number 4

LEGEND

PA PLANTING AREA - SEE LANDSCAPE PLAN

NOTES

1. SEE IRRIGATION PLANS FOR PLANTER BOX SLEEVING
2. ALT BID METAL EDGER APPLIES TO CONCRETE MOW BAND AROUND SEED ADJACENT I-25, ALT BID DOES NOT APPLY TO CONCRETE MOW BAND IN MEDIANS.
3. SEE SHEET UD3.0 FOR FULL EXTENTS OF CONCRETE LANDSCAPE MOW BAND ADJACENT I-25
4. SEE SHEET UD4.8 FOR MEDIAN STAIN COLOR

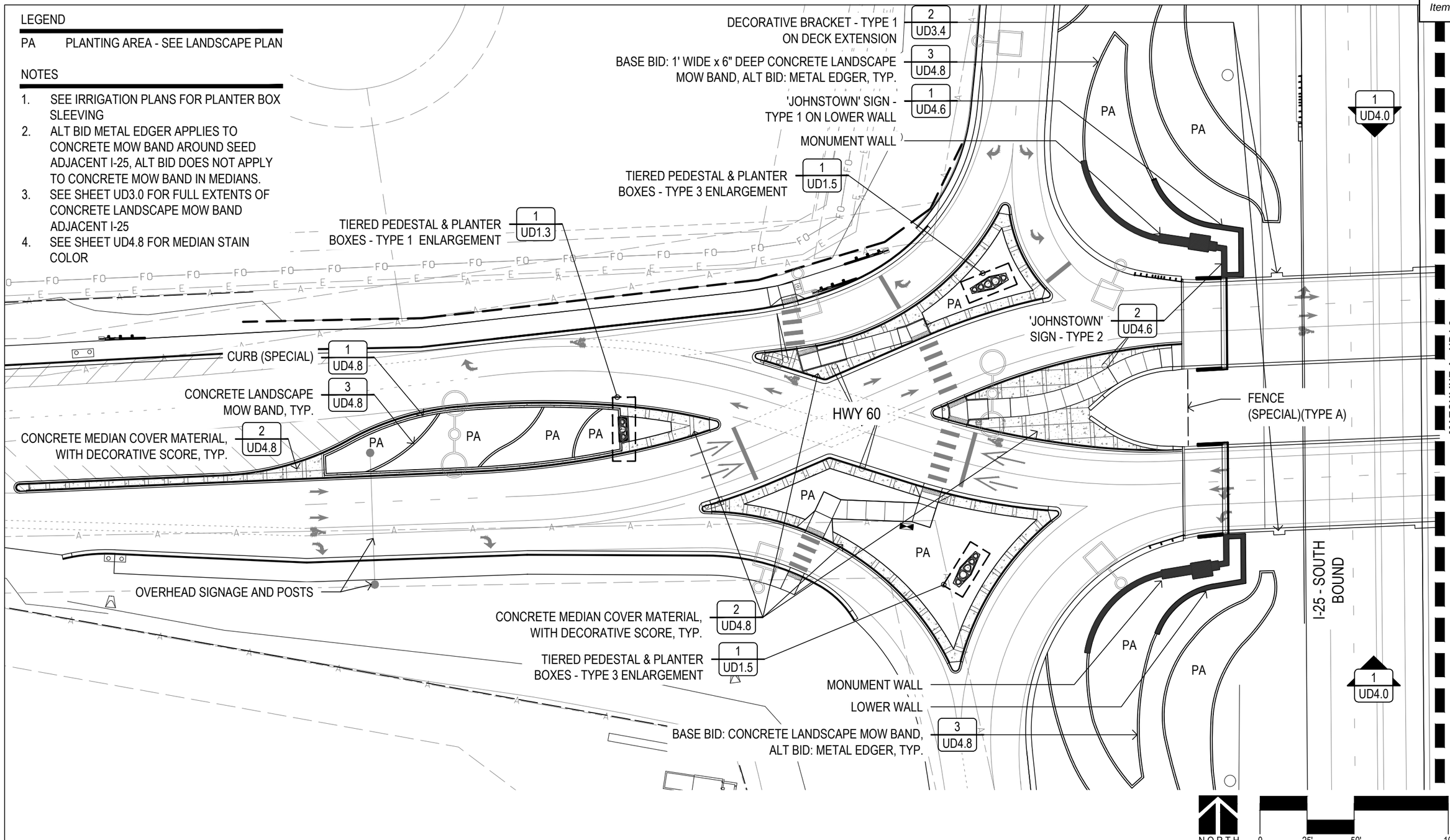

Print Date: 09/13/2021	Sheet Revisions	Colorado Department of Transportation	As Constructed
Drawing File Name:	Date: / Comments / Init.	1050 Lee Hill Road, Boulder, CO 80302, Phone: 303-546-5676, FAX: 303-444-0751	No Revisions:
Horiz. Scale: / Vert. Scale: As Noted		Region 4 ALG	Revised: REVISED
Unit Information / Unit Leader Initials			Void: VOID

BHA Design Incorporated, 1603 Oakridge Drive, Fort Collins, Colorado 80525, voice: 970.223.7577, www.bhadesign.com

I-25 EXPR. LANES SEG 5&6 CP5
URBAN DESIGN ELEMENTS
WEST MEDIAN - SITE PLAN

Designer:	MCB	Structure Numbers	C-17-FX
Detailer:	MCB		C-17-FXA
Sheet Subset:	URBAN DSGN	Subset Sheets:	UD1.1

Project No./Code: NHPP 0253-275

23019

Sheet Number 48

RFC SUBMITTAL - NOT FOR CONSTRUCTION - OCTOBER 25, 2021

$PENTBLS$ $PLTDRVS$ $PLOT_INFO$ $DATE$

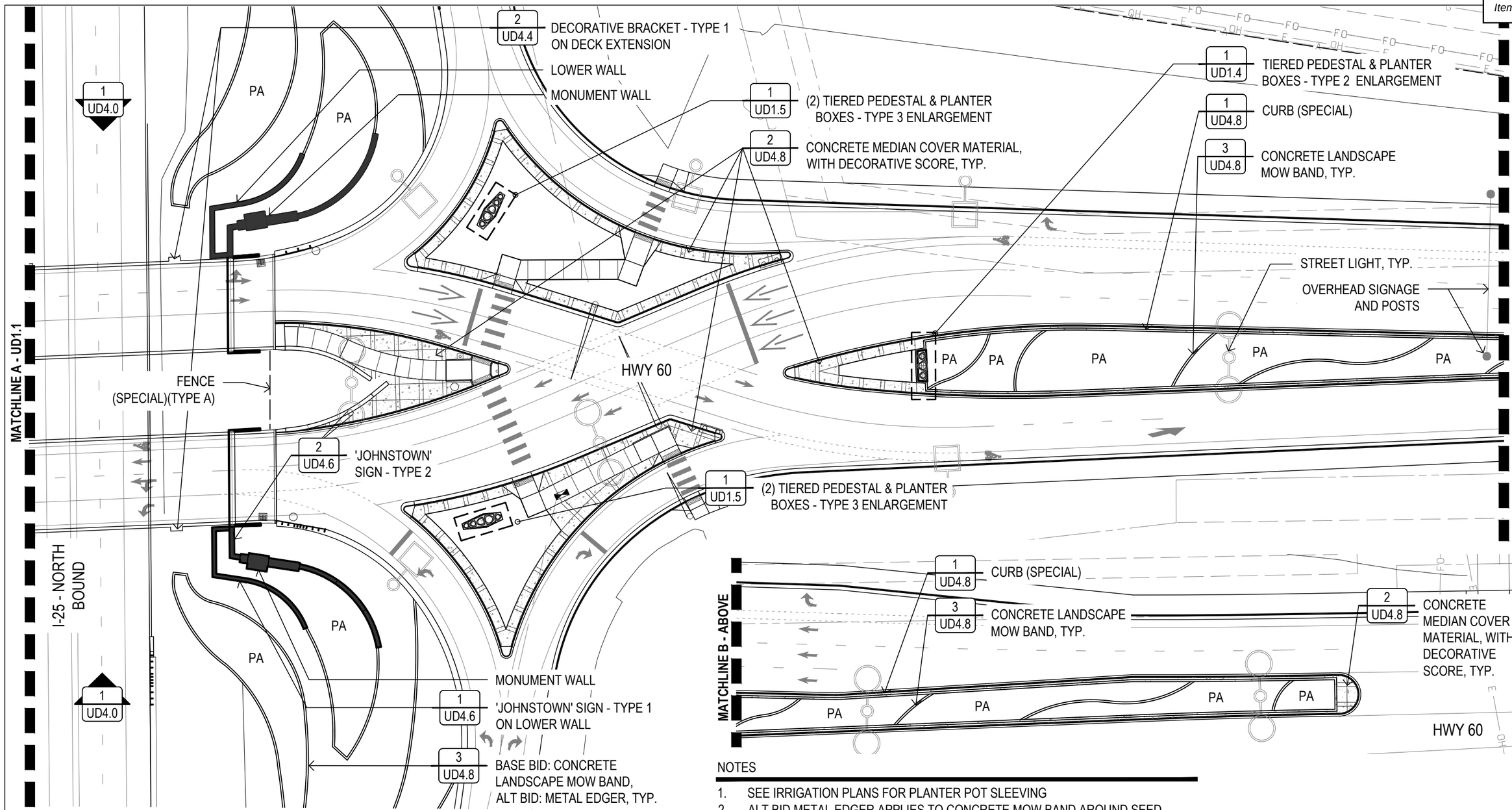

LEGEND

PA PLANTING AREA - SEE LANDSCAPE PLAN

NOTES

1. SEE IRRIGATION PLANS FOR PLANTER POT SLEEVING
2. ALT BID METAL EDGER APPLIES TO CONCRETE MOW BAND AROUND SEED ADJACENT I-25, ALT BID DOES NOT APPLY TO CONCRETE MOW BAND IN MEDIANS.
3. SEE SHEET UD3.0 FOR FULL EXTENTS OF CONCRETE LANDSCAPE MOW BAND ADJACENT I-25
4. SEE SHEET UD4.8 FOR MEDIAN STAIN COLOR

NORTH 0 25' 50' 100'

RFC SUBMITTAL - NOT FOR CONSTRUCTION - OCTOBER 25, 2021

Print Date: 09/13/2021	Sheet Revisions	Colorado Department of Transportation	As Constructed
Drawing File Name:	Date: / Comments / Init.	1050 Lee Hill Road, Boulder, CO 80302, Phone: 303-546-5676, FAX: 303-444-0751	No Revisions:
Horiz. Scale: / Vert. Scale: As Noted		Region 4 ALG	Revised: REVISED
Unit Information / Unit Leader Initials			Void: VOID

BHA Design Incorporated, 1603 Oakridge Drive, Fort Collins, Colorado 80525, voice: 970.223.7577, www.bhadesign.com

I-25 EXPR. LANES SEG 5&6 CP5
URBAN DESIGN ELEMENTS
EAST MEDIAN - SITE PLAN

Designer:	MCB	Structure Numbers	C-17-FX
Detailer:	MCB		C-17-FXA
Sheet Subset:	URBAN DSGN	Subset Sheets:	UD1.2

Project No./Code: NHPP 0253-275

23019

Sheet Number 49

$PLOT_INFO$ $DATE$ $PLTDRVS$ $PENTBLS$ XXX MM/YY XXX MM/YY XXX MM/YY XXX MM/YY XXX MM/YY XXX MM/YY

NOTES

1. DIMENSIONS IN PLANTER BOX LAYOUT PLAN DELINEATE CENTER OF PLANTER BOXES, CONTRACTOR SHALL COORDINATE DRAIN HOLE LOCATION WITH MANUFACTURER AND IRRIGATION SLEEVE LOCATION SO THAT PLANTER BOXES ARE LOCATED AS SHOWN ON PLAN.

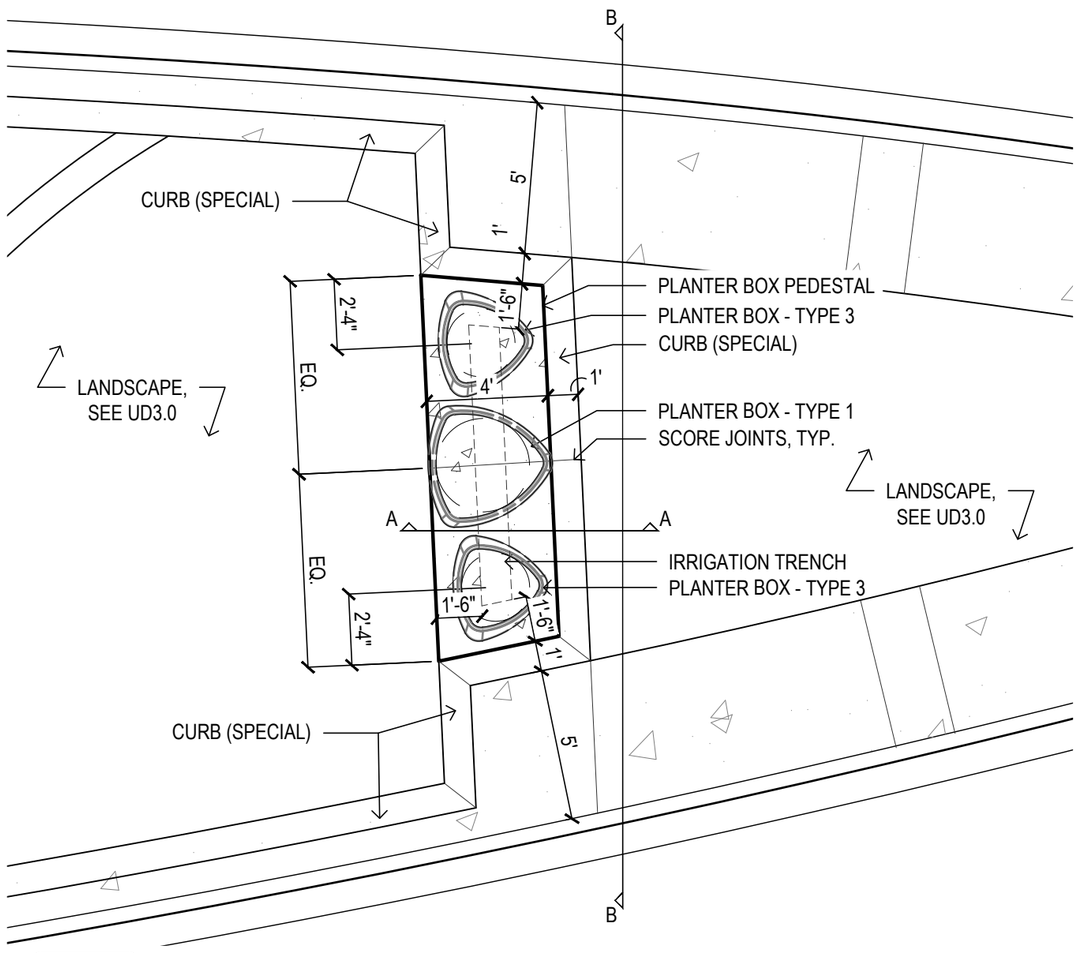

1 TIERED PEDESTAL & PLANTER BOXES - TYPE 1 ENLARGEMENT

SCALE: 1"=5'-0"

NORTH

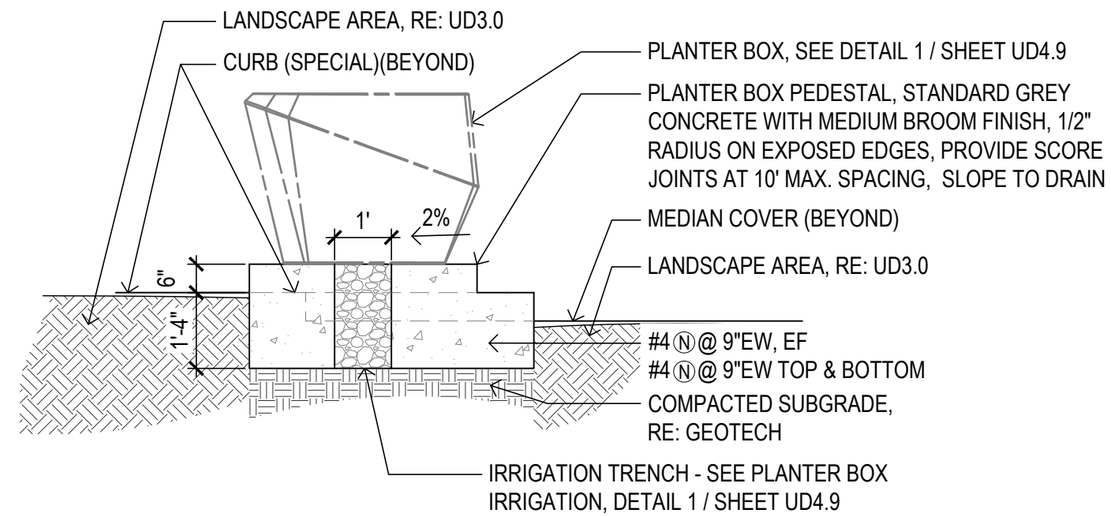

SECTION A

NTS

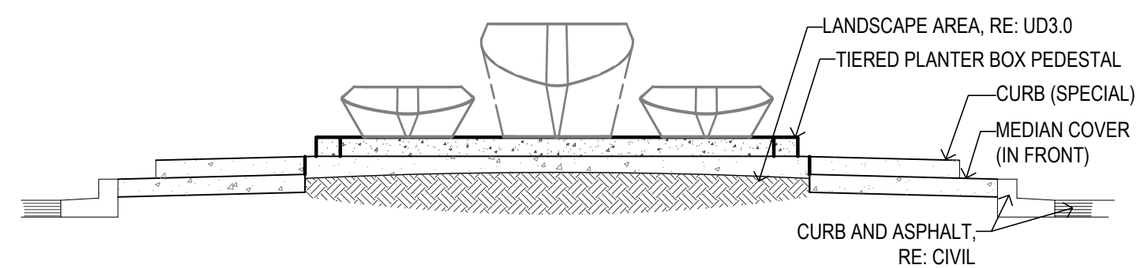

SECTION B

NTS

Print Date: 09/13/2021		Sheet Revisions	
Drawing File Name:		Date:	Comments	Init.
Horiz. Scale:	Vert. Scale: As Noted		
Unit Information	Unit Leader Initials		

BHA Design Incorporated
1603 Oakridge Drive
Fort Collins, Colorado 80525
voice: 970.223.7577
www.bhadesign.com

Colorado Department of Transportation
1050 Lee Hill Road
Boulder, CO 80302
Phone: 303-546-5676
FAX: 303-444-0751
Region 4 ALG

As Constructed			
No Revisions:			
Revised:	REVISED		
Void:	VOID		

I-25 EXPR. LANES SEG 5&6 CP5
URBAN DESIGN ELEMENTS
TIERED PEDESTAL ENLARGEMENT

Designer:	MCB	Structure Numbers	C-17-FX
Detailer:	MCB		C-17-FXA
Sheet Subset: URBAN DSGN		Subset Sheets:	UD1.3

Project No./Code
NHPP 0253-275
23019
Sheet Number 5

RFC SUBMITTAL - NOT FOR CONSTRUCTION - OCTOBER 25, 2021

$PLOT_INFO$ $DATE$ $PLTDRVS$ $PENTBLS$ XXX MM/YY XXX MM/YY

NOTES

1. DIMENSIONS IN PLANTER BOX LAYOUT PLAN DELINEATE CENTER OF PLANTER BOXES, CONTRACTOR SHALL COORDINATE DRAIN HOLE LOCATION WITH MANUFACTURER AND IRRIGATION SLEEVE LOCATION SO THAT PLANTER BOXES ARE LOCATED AS SHOWN ON PLAN.

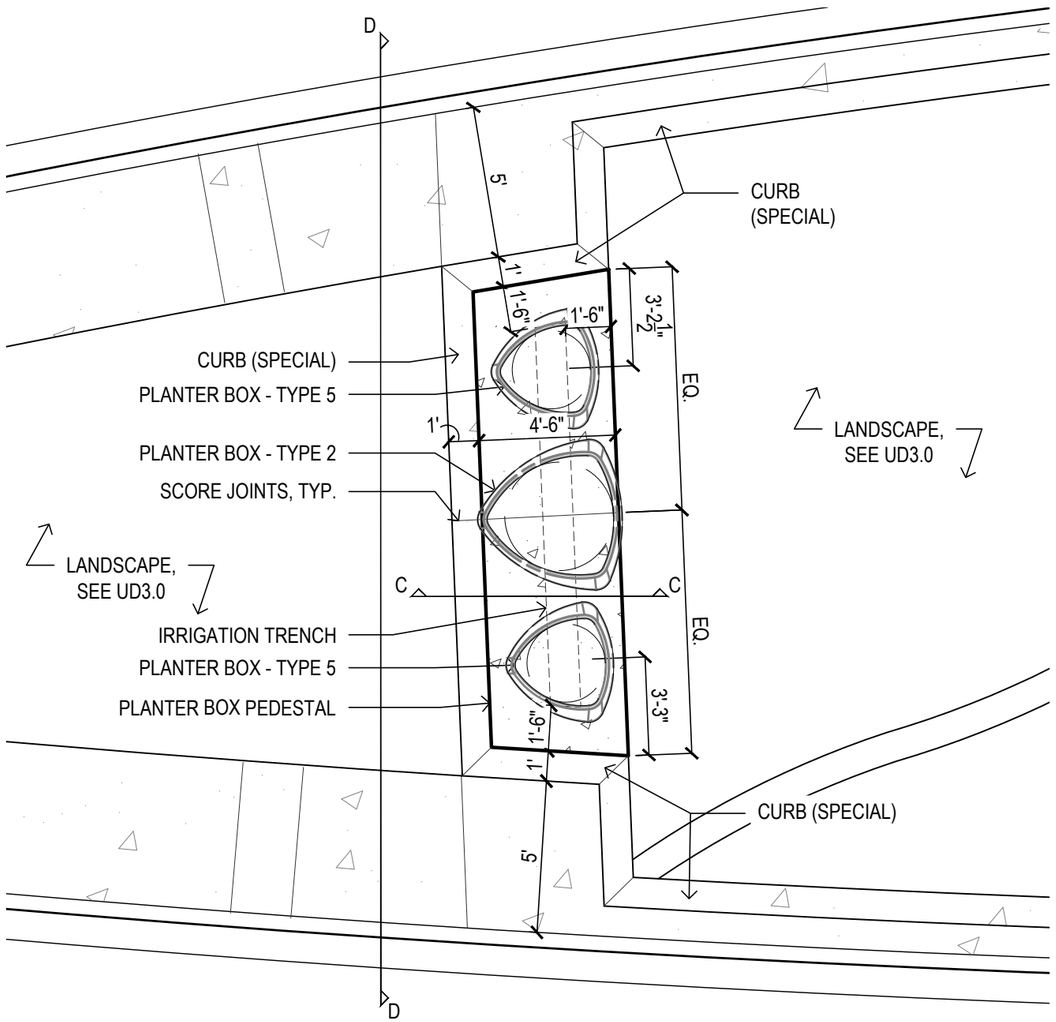

1 TIERED PEDESTAL & PLANTER BOXES - TYPE 2 ENLARGEMENT

SCALE: 1"=5'-0"

NORTH

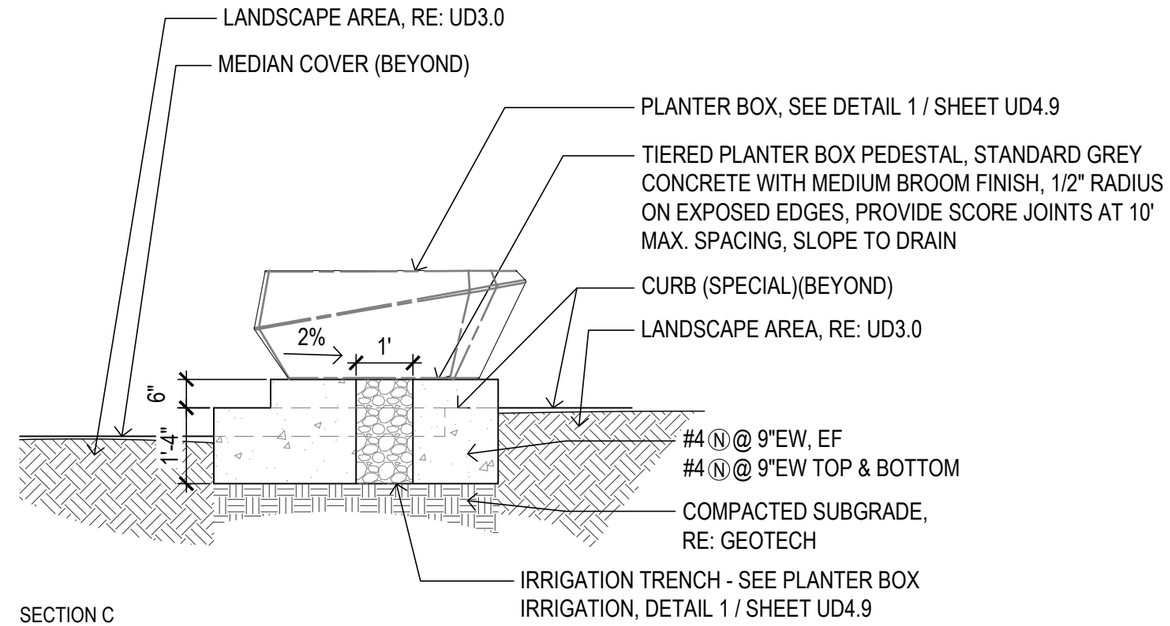

SECTION C

NTS

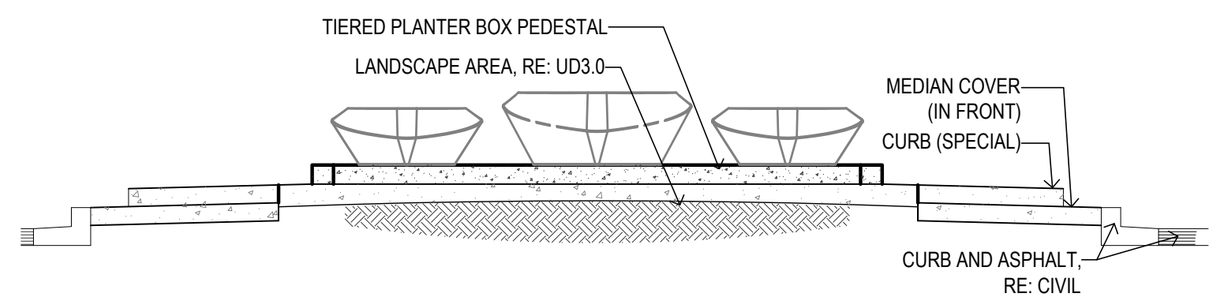

SECTION D

NTS

Print Date: 09/13/2021	Sheet Revisions			Colorado Department of Transportation	As Constructed
Drawing File Name:	Date:	Comments	Init.	1050 Lee Hill Road, Boulder, CO 80302, Phone: 303-546-5676, FAX: 303-444-0751	No Revisions:
Horiz. Scale: Vert. Scale: As Noted				Region 4 ALG	Revised: REVISED
Unit Information Unit Leader Initials					Void: VOID
BHA Design Incorporated, 1603 Oakridge Drive, Fort Collins, Colorado 80525, voice: 970.223.7577, www.bhadesign.com					

I-25 EXPR. LANES SEG 5&6 CP5
URBAN DESIGN ELEMENTS
TIERED PEDESTAL ENLARGEMENT

Designer:	MCB	Structure Numbers	C-17-FX
Detailer:	MCB		C-17-FXA
Sheet Subset:	URBAN DSGN	Subset Sheets:	UD1.4

Project No./Code: NHPP 0253-275

23019

Sheet Number 5

RFC SUBMITTAL - NOT FOR CONSTRUCTION - OCTOBER 25, 2021

$PLOT_INFO$ $DATE$ $PLTDRVS$ $PENTBL.S$ MM/YY XXX MM/YY XXX

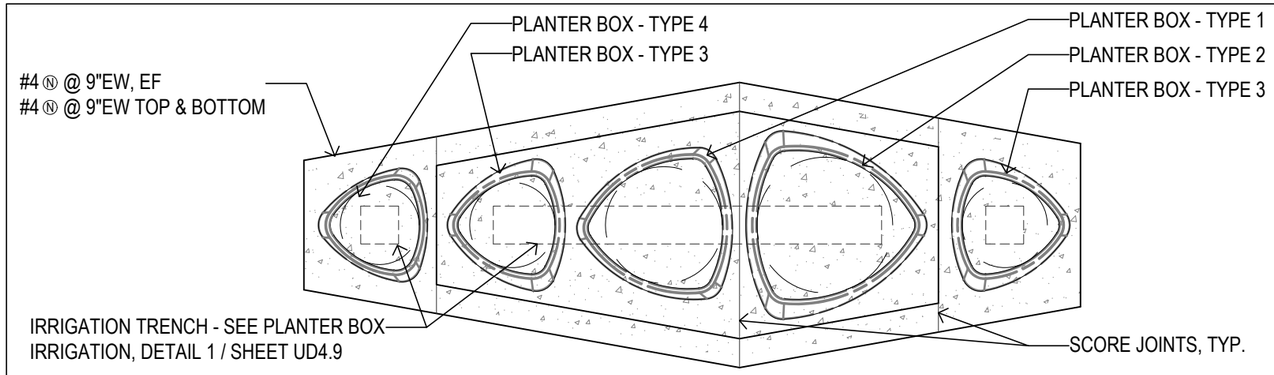

PLAN VIEW

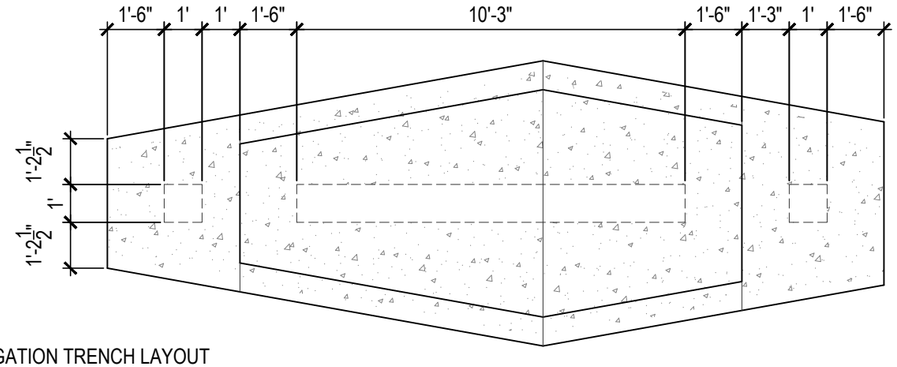

IRRIGATION TRENCH LAYOUT

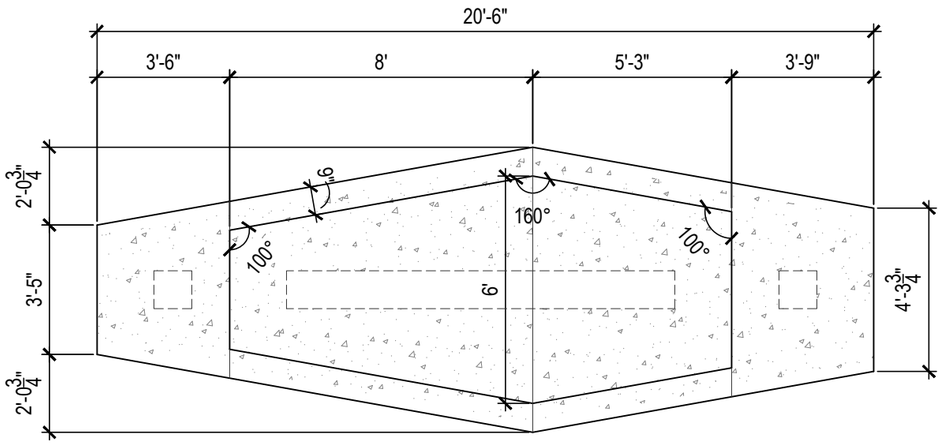

PEDESTAL LAYOUT PLAN

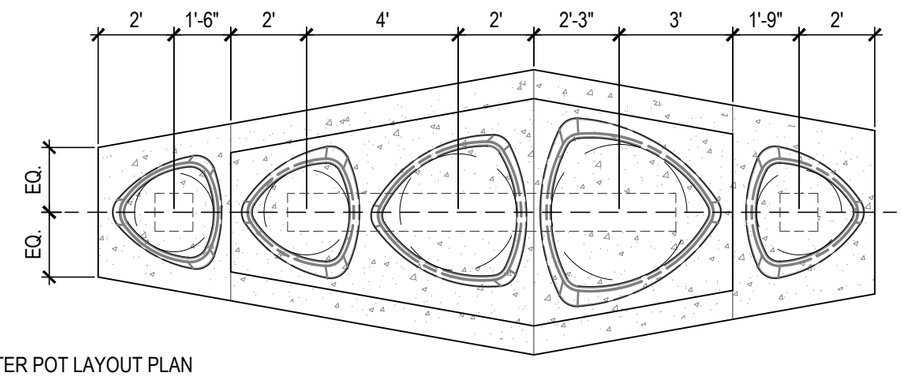

PLANTER POT LAYOUT PLAN

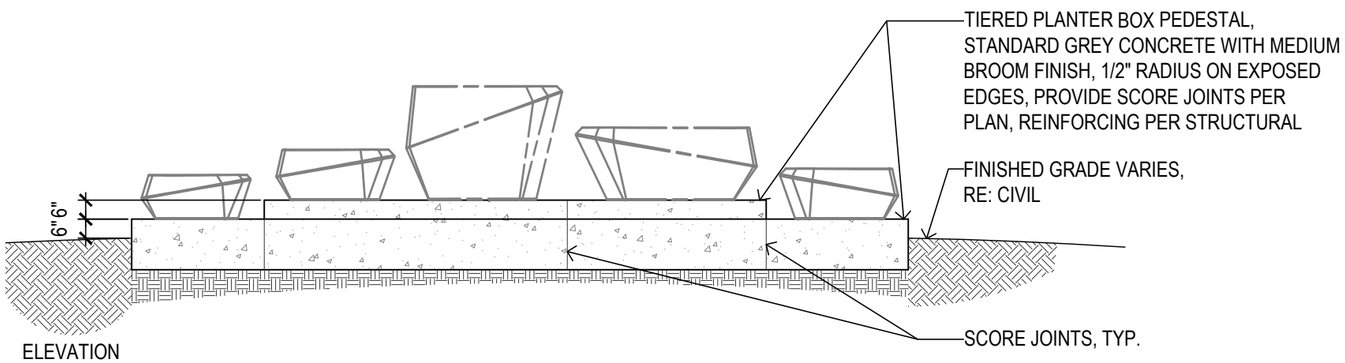

ELEVATION

1 TIERED PEDESTAL & PLANTER POTS - TYPE 3

SCALE: 1/4"=1'-0"

NOTES

1. DIMENSIONS IN PLANTER BOX LAYOUT PLAN DELINEATE CENTER OF PLANTER BOXES, CONTRACTOR SHALL COORDINATE DRAIN HOLE LOCATION WITH MANUFACTURER AND IRRIGATION SLEEVE LOCATION SO THAT PLANTER BOXES ARE LOCATED AS SHOWN ON PLAN.

RFC SUBMITTAL - NOT FOR CONSTRUCTION - OCTOBER 25, 2021

Print Date: 09/13/2021	Sheet Revisions	Colorado Department of Transportation	As Constructed	I-25 EXPR. LANES SEG 5&6 CP5 URBAN DESIGN ELEMENTS TIERED PEDESTAL ENLARGEMENT	Project No./Code
Drawing File Name:	Date: / Comments / Init.	1050 Lee Hill Road, Boulder, CO 80302, Phone: 303-546-5676, FAX: 303-444-0751	No Revisions:		NHPP 0253-275
Horiz. Scale: / Vert. Scale: As Noted		Region 4 ALG	Revised: REVISED	Designer: MCB / Structure Numbers C-17-FX	23019
Unit Information / Unit Leader Initials			Void: VOID	Detailer: MCB / C-17-FXA	Sheet Number 51
BHA Design Incorporated, 1603 Oakridge Drive, Fort Collins, Colorado 80525, voice: 970.223.7577, www.bhadesign.com				Sheet Subset: URBAN DSGN / Subset Sheets: UD1.5	

$PLOT_INFO$ $DATE$ $PLTDRV$ $PENTBL$ XXX MM/YY XXX MM/YY XXX MM/YY XXX MM/YY XXX MM/YY XXX MM/YY

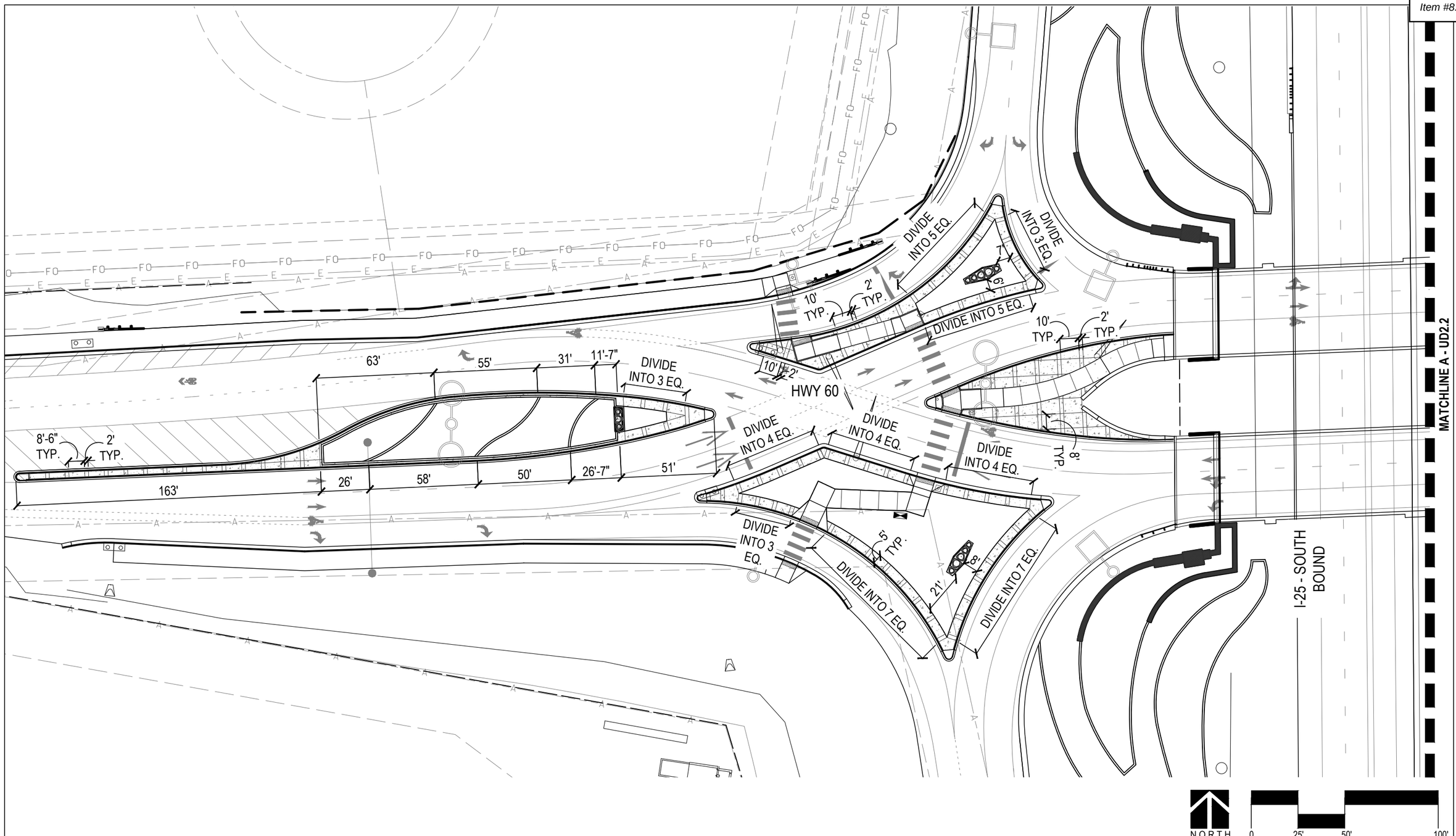

RFC SUBMITTAL - NOT FOR CONSTRUCTION - OCTOBER 25, 2021

Print Date: 09/13/2021		Sheet Revisions	Colorado Department of Transportation	As Constructed	I-25 EXPR. LANES SEG 5&6 CP5 URBAN DESIGN ELEMENTS WEST MEDIAN - LAYOUT PLAN	Project No./Code
Drawing File Name:		Date: / Comments / Init.	1050 Lee Hill Road, Boulder, CO 80302, Phone: 303-546-5676, FAX: 303-444-0751	No Revisions:		NHPP 0253-275
Horiz. Scale:	Vert. Scale: As Noted			Revised: REVISED	Designer: MCB / Structure Numbers C-17-FX	23019
Unit Information	Unit Leader Initials		Region 4 ALG	Void: VOID	Detailer: MCB / C-17-FXA	
BHA Design Incorporated, 1603 Oakridge Drive, Fort Collins, Colorado 80525, voice: 970.223.7577, www.bhadesign.com					Sheet Subset: URBAN DSGN / Subset Sheets: UD2.1	Sheet Number 53

$PLOT_INFO$ $DATE$ $PLTDRVS$ $PENTBLS$ XXX MM/YY XXX MM/YY XXX MM/YY XXX MM/YY XXX MM/YY XXX MM/YY

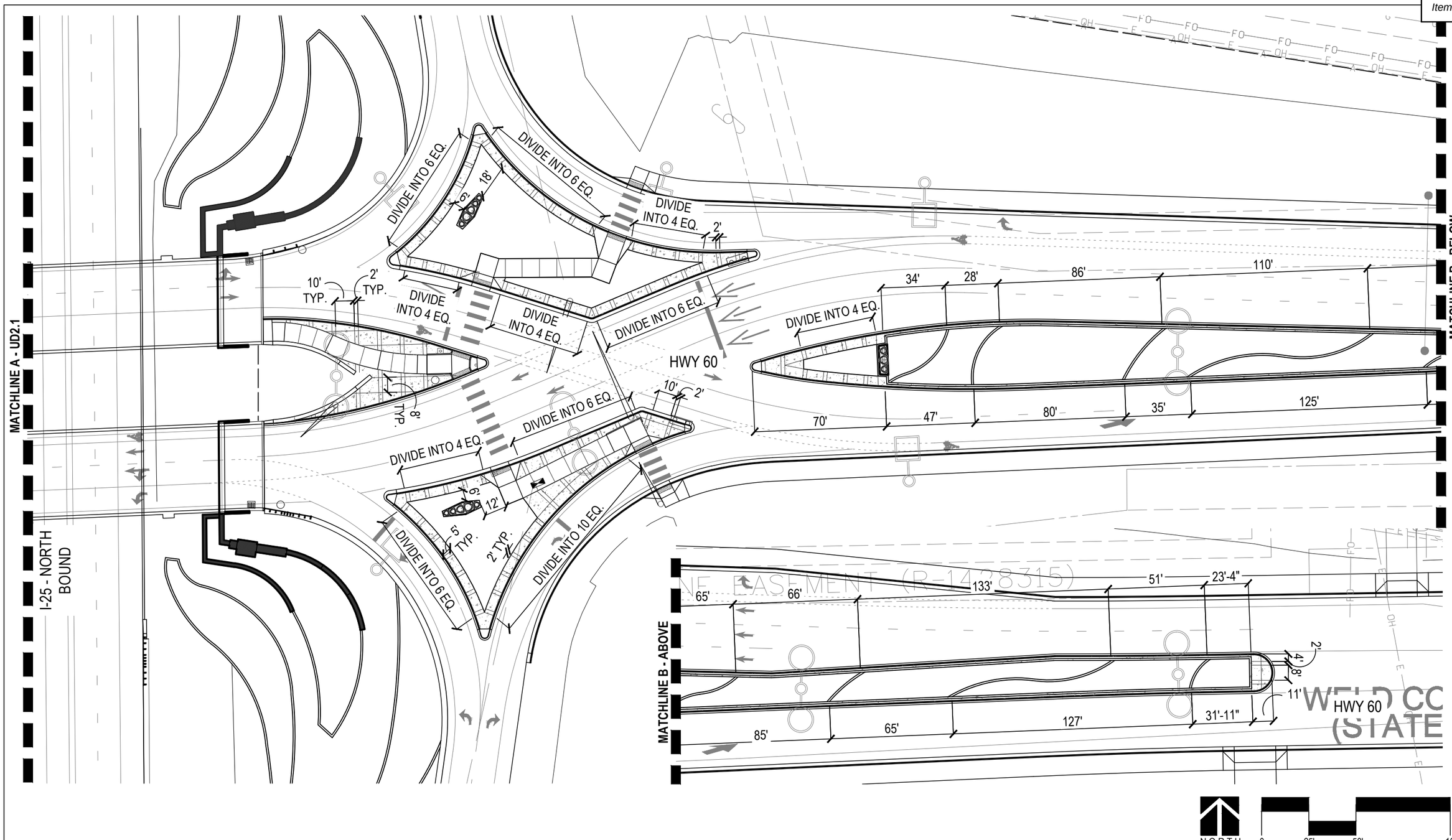

RFC SUBMITTAL - NOT FOR CONSTRUCTION - OCTOBER 25, 2021

Print Date: 09/13/2021		Sheet Revisions			
Drawing File Name:		Date:	Comments	Init.	
Horiz. Scale:	Vert. Scale: As Noted				
Unit Information	Unit Leader Initials				

BHA Design Incorporated
1603 Oakridge Drive
Fort Collins, Colorado 80525
voice: 970.223.7577
www.bhadesign.com

Colorado Department of Transportation
1050 Lee Hill Road
Boulder, CO 80302
Phone: 303-546-5676
FAX: 303-444-0751
Region 4 ALG

As Constructed			
No Revisions:			
Revised:	REVISED		
Void:	VOID		

I-25 EXPR. LANES SEG 5&6 CP5
URBAN DESIGN ELEMENTS
EAST MEDIAN - LAYOUT PLAN

Designer:	MCB	Structure Numbers	C-17-FX
Detailer:	MCB		C-17-FXA
Sheet Subset: URBAN DSGN		Subset Sheets:	UD2.2

Project No./Code
NHPP 0253-275
23019
Sheet Number 54

$PENTBLS$
$PLTDRVS$
$PLOT_INFO$
$DATE$

LEGEND

SEED (NATIVE) DRILL (TYPE 1)

SEED (NATIVE) DRILL (TYPE 2)

NOTES:

1. SEED - TYPE 2 SHALL BE APPLIED IN LOCATIONS DISTURBED BY CONSTRUCTION UNLESS OTHERWISE NOTED
2. SEEDED AREAS SHALL RECEIVE TOP SOIL AND SOIL CONDITIONING, RE: CP 2 - 3 CONSTRUCTION PACKAGES
3. THIS PLAN ONLY INCLUDES JOHNSTOWN'S LANDSCAPE ENHANCEMENTS. LANDSCAPE AND SEED OUTSIDE OF THE ENHANCED AREAS SHALL COMPLY WITH CDOT'S BASE PROJECT.

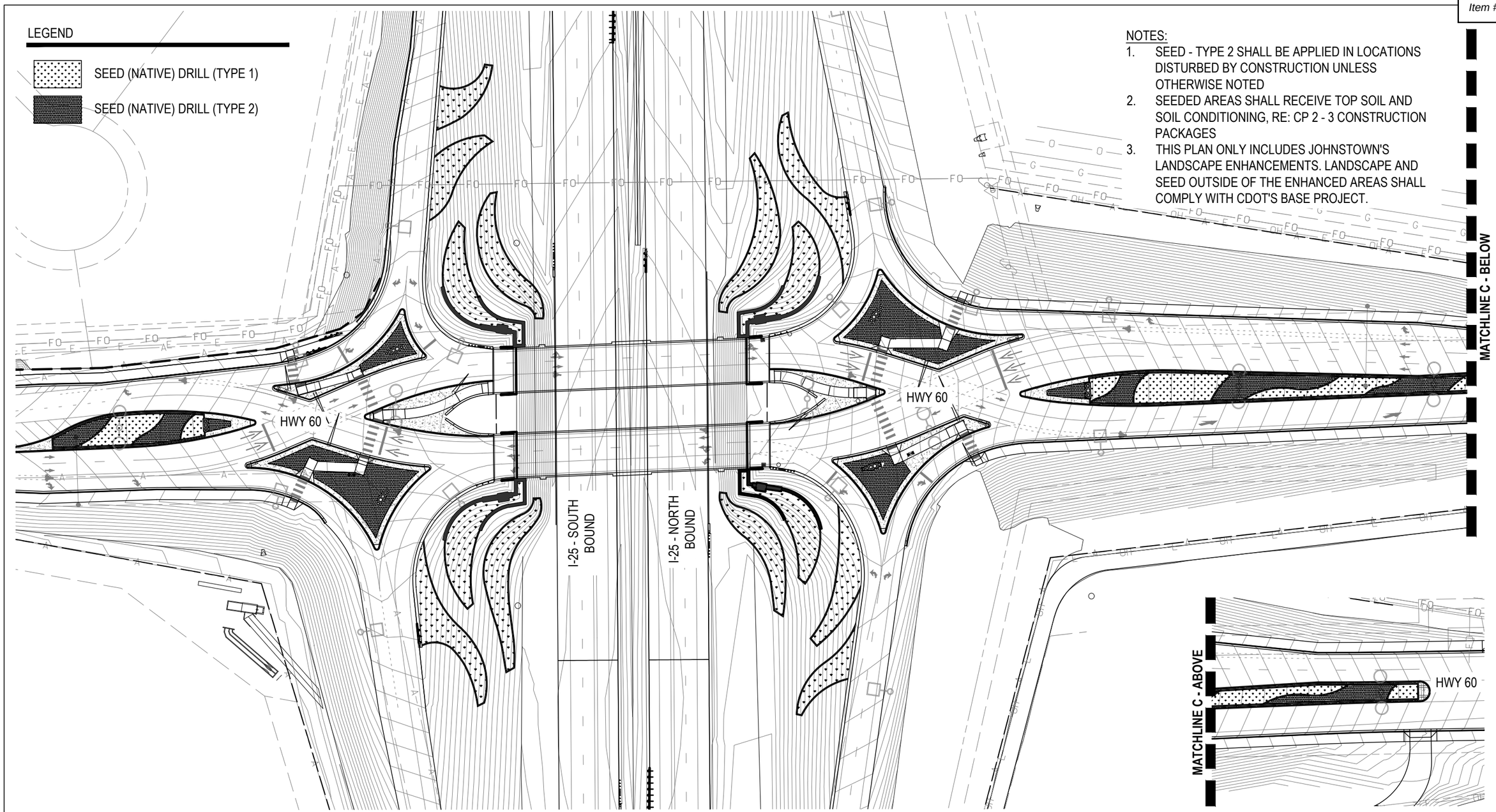

RFC SUBMITTAL - NOT FOR CONSTRUCTION - OCTOBER 25, 2021

Print Date: 09/13/2021			
Drawing File Name:			
Horiz. Scale:	Vert. Scale: As Noted		
Unit Information	Unit Leader Initials		

BHA Design Incorporated
1603 Oakridge Drive
Fort Collins, Colorado 80525
voice: 970.223.7577
www.bhadesign.com

Sheet Revisions

Date:	Comments	Init.

Colorado Department of Transportation
1050 Lee Hill Road
Boulder, CO 80302
Phone: 303-546-5676
FAX: 303-444-0751
Region 4 ALG

As Constructed
No Revisions:
Revised: REVISED
Void: VOID

I-25 EXPR. LANES SEG 5&6 CP5
URBAN DESIGN ELEMENTS
ENHANCED SEEDING PLAN

Designer: MCB
Detailer: MCB
Sheet Subset: URBAN DSGN
Structure Numbers: C-17-FX, C-17-FXA
Subset Sheets: UD3.0

Project No./Code
NHPP 0253-275
23019
Sheet Number 5

$PLOT_INFO$ $DATE$ $PLTDRVS$ $PENTBL$S$ XXX MM/YY XXX MM/YY XXX MM/YY XXX MM/YY XXX MM/YY XXX MM/YY

LEGEND

DECIDUOUS SHADE TREE

1 QU SH
2 CA SP
HWY 60
I-25 - SOUTH BOUND
I-25 - NORTH BOUND
HWY 60
2 QU SH
3 GY DI
MATCHLINE D - BELOW
MATCHLINE D - ABOVE
HWY 60

NORTH 0 50' 100' 200'

RFC SUBMITTAL - NOT FOR CONSTRUCTION - OCTOBER 25, 2021

Print Date: 09/13/2021			
Drawing File Name:			
Horiz. Scale:	Vert. Scale: As Noted		
Unit Information	Unit Leader Initials		

BHA Design Incorporated
1603 Oakridge Drive
Fort Collins, Colorado 80525
voice: 970.223.7577
www.bhadesign.com

Sheet Revisions

Date:	Comments	Init.

Colorado Department of Transportation
1050 Lee Hill Road
Boulder, CO 80302
Phone: 303-546-5676
FAX: 303-444-0751
Region 4 ALG

As Constructed
No Revisions:
Revised: REVISED
Void: VOID

I-25 EXPR. LANES SEG 5&6 CP5
URBAN DESIGN ELEMENTS
PLANTING PLAN

Designer: MCB
Detailer: MCB
Structure Numbers: C-17-FX, C-17-FXA
Sheet Subset: URBAN DSGN
Subset Sheets: UD3.1

Project No./Code
NHPP 0253-275
23019
Sheet Number 5

$PLOT_INFO$ $DATE$ $PLTDRVS$ $PENTBLS$ XXX MM/YY XXX MM/YY XXX MM/YY XXX MM/YY XXX MM/YY XXX MM/YY

PLANT SCHEDULE

ABBR.	DECIDUOUS TREES		Size	Qty.	Height	Spread
CA SP	Catalpa speciosa	Northern Catalpa	2" Cal.	2	60'	40'
GY DI	Gymnocladus dioicus 'Expresso'	Expresso Kentucky Coffeetree	2" Cal.	3	60'	50'
QU SH	Quercus shumardii	Shumard Oak	2" Cal.	3	60'	35'
			TOTAL			

NOTES

1. NO LARGE DECIDUOUS TREES SHALL BE PLANTED WITHIN FIVE FEET ON EITHER SIDE OF WATER OR SEWER LINES
2. TREES SHALL BE IRRIGATED WITH AN AUTOMATIC UNDERGROUND IRRIGATION SYSTEM , ENHANCED NATIVE SEED AREAS SHALL BE IRRIGATED WITH A TEMPORARY IRRIGATION SYSTEM , SEE IRRIGATION PLANS.
3. PLACEMENT OF ALL LANDSCAPING SHALL BE IN ACCORDANCE WITH SIGHT DISTANCE CRITERIA. NO LANDSCAPE ELEMENTS GREATER THAN 24" SHALL BE ALLOWED WITHIN THE SIGHT DISTANCE TRIANGLE WITH THE EXCEPTION OF DECIDUOUS TREES PROVIDED THAT THE LOWEST BRANCH IS AT LEAST 6' FROM GRADE.
4. THE FINAL LANDSCAPE PLAN SHALL BE COORDINATED WITH ALL OTHER FINAL PLAN ELEMENTS SO THAT THE PROPOSED GRADING, STORM DRAINAGE, AND OTHER DEVELOPMENT IMPROVEMENTS DO NOT CONFLICT WITH NOR PRECLUDE INSTALLATION AND MAINTENANCE OF LANDSCAPE ELEMENTS ON THIS PLAN.
5. MINOR CHANGES IN SPECIES AND PLANT LOCATIONS MAY BE MADE DURING CONSTRUCTION -- AS REQUIRED BY SITE CONDITIONS OR PLANT AVAILABILITY. OVERALL QUANTITY, QUALITY, AND DESIGN CONCEPT MUST BE CONSISTENT WITH THE APPROVED PLANS. IN THE EVENT OF CONFLICT WITH THE QUANTITIES INCLUDED IN THE PLANT LIST, SPECIES AND QUANTITIES ILLUSTRATED SHALL BE PROVIDED. ALL CHANGES OF PLANT SPECIES AND LOCATION MUST HAVE WRITTEN APPROVAL BY OWNER'S REPRESENTATIVE PRIOR TO INSTALLATION.

SEED (NATIVE) DRILL (TYPE 1)

TOTAL = 0.84 acres			
SCIENTIFIC NAME	COMMON NAME	Seeds/ft	lbs/Acre
Panicum virgatum Switchgrass	Blackwell Switchgrass	259000	15

SEED (NATIVE) DRILL (TYPE 2)

TOTAL = TBD - SEED TO BE APPLIED IN AREAS DISTURBED BY CONSTRUCTION (UNLESS OTHERWISE NOTED)
SEED TYPE SHALL MATCH CDOT STANDARD SEED MIX

NOTES:

1. CONTRACTOR IS RESPONSIBLE FOR LOCATING AND PURCHASING ALL SPECIES LISTED IN MIX. CONTRACTOR IS RESPONSIBLE FOR CALCULATING THE APPROPRIATE SEED AMOUNTS TO PURCHASE.
2. CONTRACTOR IS RESPONSIBLE FOR PROVIDING SEED TAGS TO REPRESENTATIVE.
3. ALL MATERIALS FURNISHED SHALL BE FREE OF COLORADO STATE NOXIOUS WEEDS

GENERAL TREE PLANTING NOTES

1. PRUNE ONLY CROSSOVER LIMBS, CO-DOMINANT LEADERS, AND BROKEN OR DEAD BRANCHES. SOME INTERIOR TWIGS AND LATERAL BRANCHES MAY BE PRUNED; HOWEVER, DO NOT REMOVE THE TERMINAL BUDS OF BRANCHES THAT EXTEND TO THE EDGE OF THE CROWN.
2. MARK NORTH SIDE OF THE TREE IN THE NURSERY AND ROTATE TREE TO FACE NORTH AT THE SITE WHENEVER POSSIBLE. TREES WHOSE NORTH ORIENTATION IS NOT CHANGED FROM THE NURSERY DO NOT NEED TO BE WRAPPED, EXCEPT TREES WITH VERY THIN BARK.
3. EACH TREE SHALL BE PLANTED SUCH THAT THE TRUNK FLARE IS VISIBLE AT THE TOP OF THE ROOT BALL. DO NOT COVER THE TOP OF THE ROOT BALL WITH SOIL.
4. SET TOP OF ROOT BALL FLUSH WITH GRADE OR 1"-2" HIGHER IN SLOWLY DRAINING SOILS.
5. DO NOT PLACE MULCH IN CONTACT WITH TREE TRUNK.
6. IN SEEDED AREAS, HOLD SEED BACK TO A MINIMUM 36" DIA. CIRCLE. FORM A 4" HIGH EARTH SAUCER BEYOND EDGE OF ROOT BALL. MULCH PLANTING PIT.

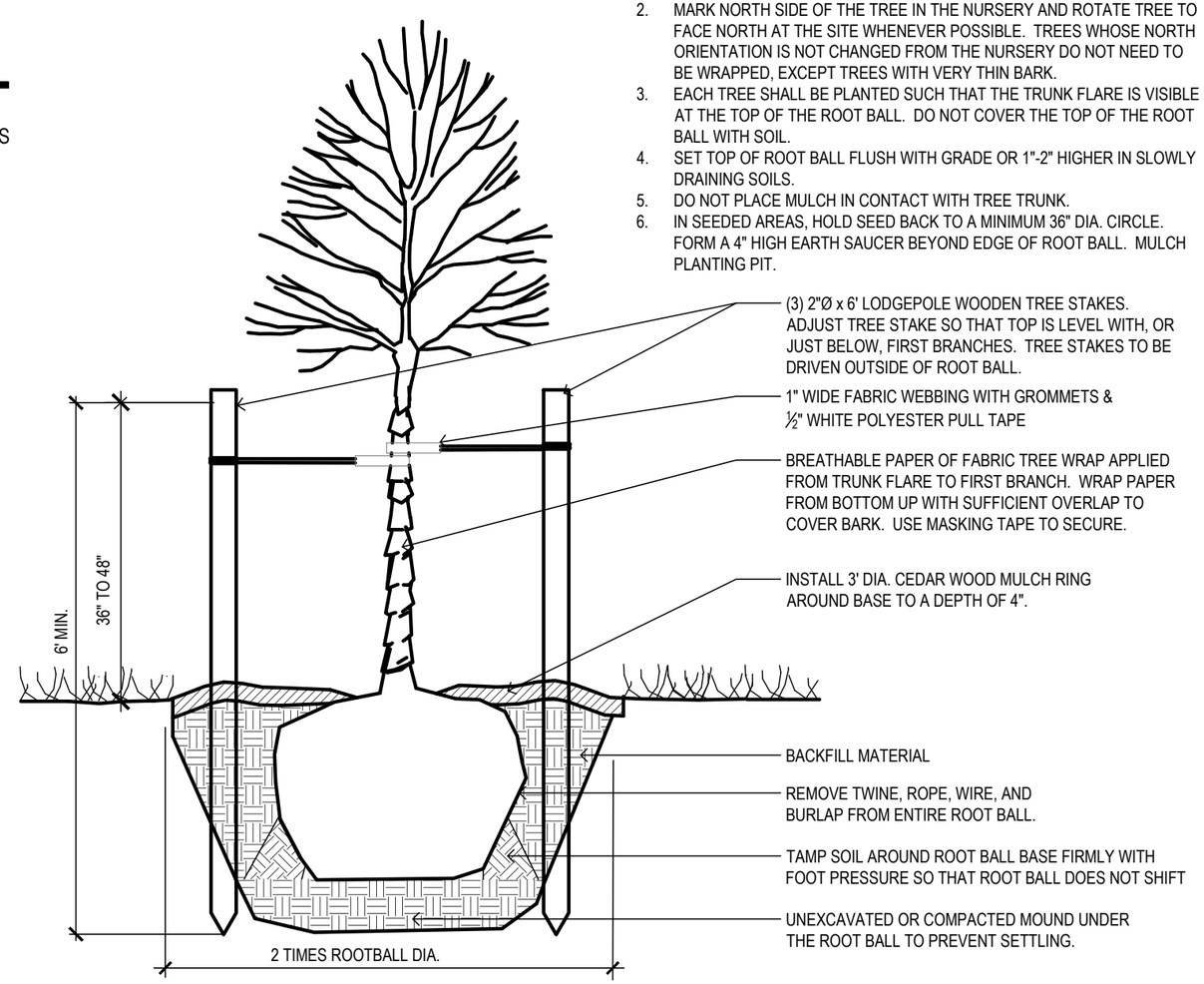

1 DECIDUOUS TREE PLANTING

SCALE: 1"=1'-0"

RFC SUBMITTAL - NOT FOR CONSTRUCTION - OCTOBER 25, 2021

Print Date: 09/13/2021		Sheet Revisions	
Drawing File Name:		Date:	Comments	Init.
Horiz. Scale:	Vert. Scale: As Noted		
Unit Information	Unit Leader Initials		

BHA Design Incorporated
1603 Oakridge Drive
Fort Collins, Colorado 80525
voice: 970 223.7577
www.bhadesign.com

Colorado Department of Transportation
1050 Lee Hill Road
Boulder, CO 80302
Phone: 303-546-5676
FAX: 303-444-0751
Region 4 ALG

As Constructed
No Revisions:
Revised: REVISED
Void: VOID

I-25 EXPR. LANES SEG 5&6 CP5
URBAN DESIGN ELEMENTS
PLANTING NOTES & DETAILS

Designer: MCB
Detailer: MCB
Sheet Subset: URBAN DSGN
Structure Numbers: C-17-FX, C-17-FXA
Subset Sheets: UD3.3

Project No./Code
NHPP 0253-275
23019
Sheet Number 5

$PLOT_INFO$ $DATE$ $PLTDRVS$ $PENTBLS$ XXX MM/YY XXX MM/YY

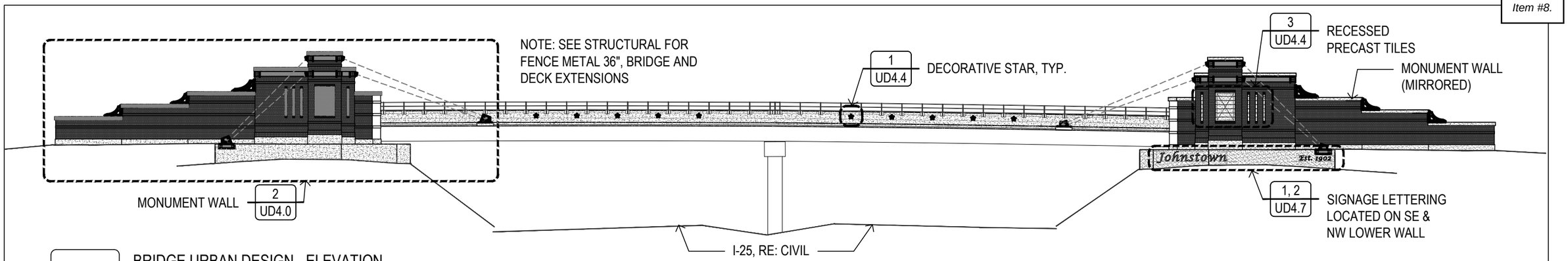

1 BRIDGE URBAN DESIGN - ELEVATION

SCALE: 1:30

LEGEND

- 1/2" STEEL PLATE (SEE STRUCTURAL)
- 1/4" STEEL PLATE ON TOP OF 1/2" PLATE (SEE STRUCTURAL)
- BRICK MASONRY: GENERAL SHALE - SONOMA
- PRECAST TILES & CAP: DAVIS COLORS - PEBBLE, 641

NOTES:
1. PROVIDE BRICK ON (4) SIDES

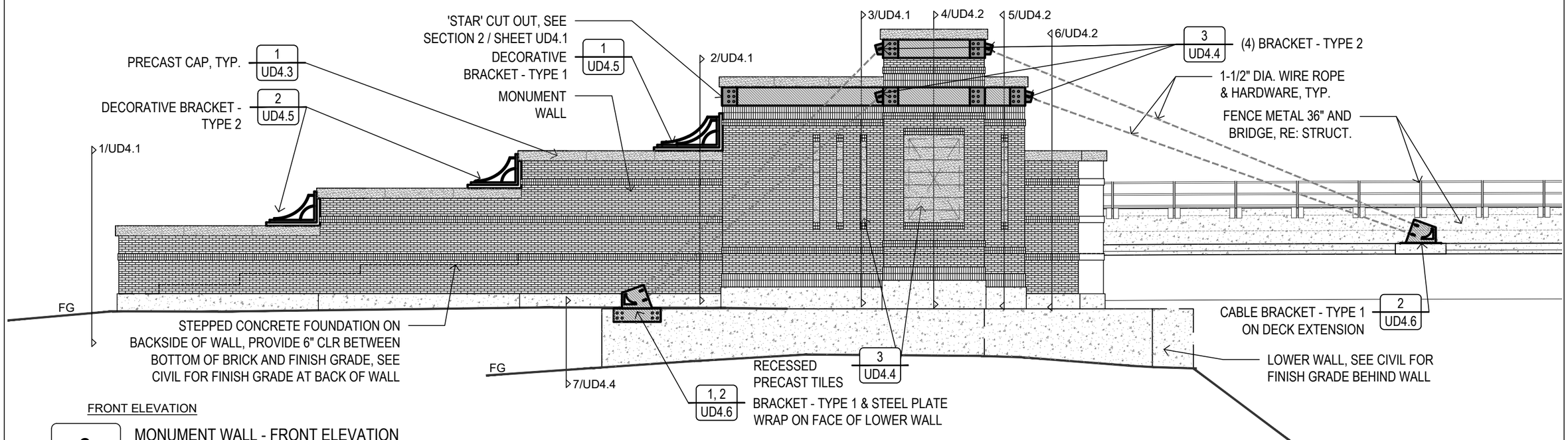

FRONT ELEVATION

2 MONUMENT WALL - FRONT ELEVATION

SCALE: 1:10

Print Date: 09/13/2021	Sheet Revisions	Colorado Department of Transportation	As Constructed
Drawing File Name:	Date: / Comments / Init.	1050 Lee Hill Road, Boulder, CO 80302, Phone: 303-546-5676, FAX: 303-444-0751	No Revisions:
Horiz. Scale: / Vert. Scale: As Noted		Region 4 ALG	Revised: REVISED
Unit Information / Unit Leader Initials			Void: VOID

BHA Design Incorporated, 1603 Oakridge Drive, Fort Collins, Colorado 80525, voice: 970.223.7577, www.bhadesign.com

I-25 EXPR. LANES SEG 5&6 CP5
URBAN DESIGN ELEMENTS
MONUMENT WALL DETAILS

Designer:	MCB	Structure Numbers	C-17-FX
Detailer:	MCB		C-17-FXA
Sheet Subset: URBAN DSGN		Subset Sheets:	UD4.0

Project No./Code: NHPP 0253-275

23019

Sheet Number 5

RFC SUBMITTAL - NOT FOR CONSTRUCTION - OCTOBER 25, 2021

$PLOT_INFO$ $DATE$ $PLTDRVS$ $PENTBL.S$ XXX MM/YY XXX MM/YY

NOTE:
1. PROVIDE BRICK ON (4) SIDES, PROVIDE WALL TIES @ 16" MAX SPACING BOTH DIRECTIONS, TYP. ADDITIONAL TIES SHALL BE ADDED TO SUPPORT BRICK LEDGES
2. BRICK VENEER EXTENDS BELOW STEEL PLATES, TYP.
3. SEE STRUCTURAL

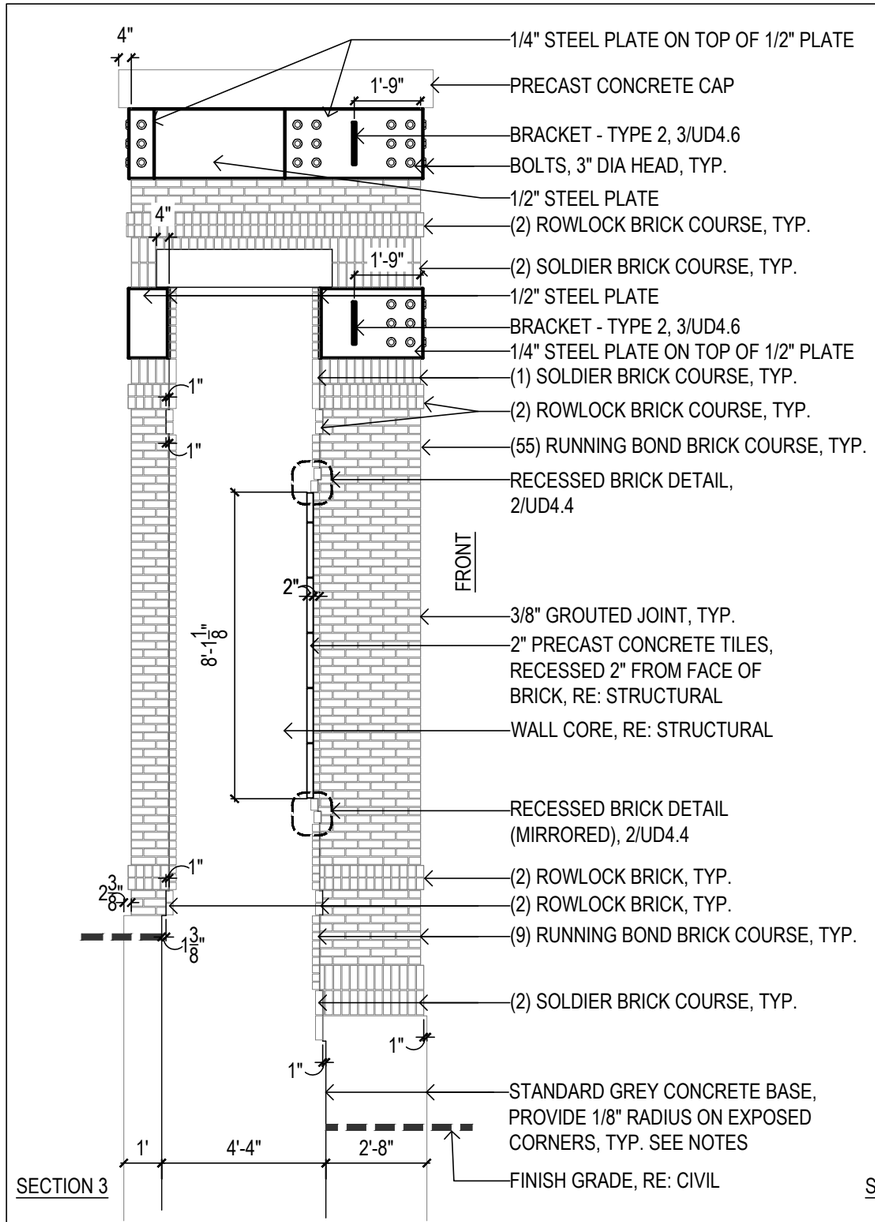

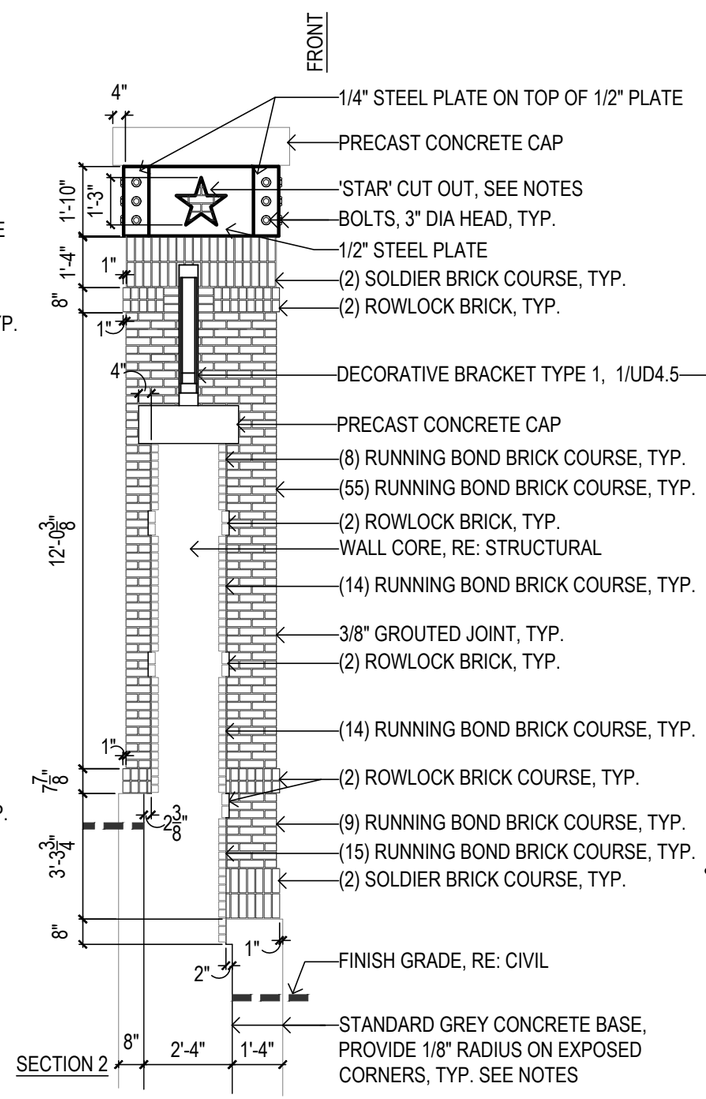

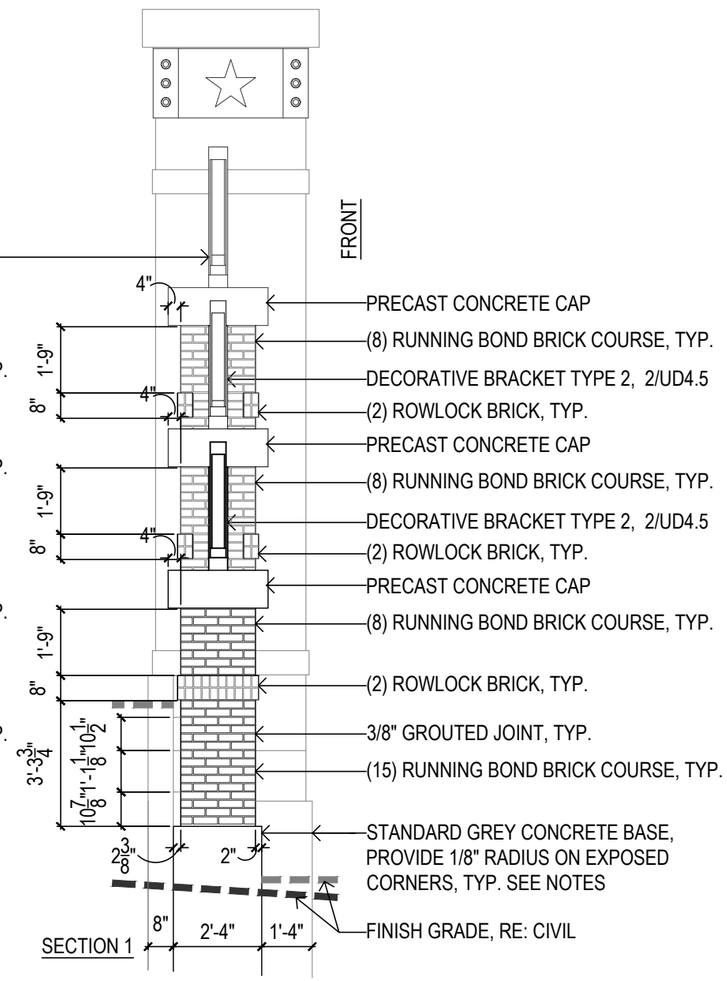

1 CORNER MONUMENT - WALL TYPE 1 - SECTIONS

SCALE: 1/4" = 1'-0"

Print Date: 09/13/2021	Sheet Revisions	Colorado Department of Transportation	As Constructed	I-25 EXPR. LANES SEG 5&6 CP5 URBAN DESIGN ELEMENTS MONUMENT WALL DETAILS		Project No./Code
Drawing File Name:	Date: / Comments / Init.	1050 Lee Hill Road, Boulder, CO 80302, Phone: 303-546-5676, FAX: 303-444-0751	No Revisions:			NHPP 0253-275
Horiz. Scale: / Vert. Scale: As Noted		Region 4 ALG	Revised: REVISED	Designer: MCB / Structure Numbers C-17-FX		23019
Unit Information / Unit Leader Initials			Void: VOID	Detailer: MCB / C-17-FXA		Sheet Number 59
BHA Design Incorporated, 1603 Oakridge Drive, Fort Collins, Colorado 80525, voice: 970.223.7577, www.bhadesign.com				Sheet Subset: URBAN DSGN / Subset Sheets: UD4.1		

RFC SUBMITTAL - NOT FOR CONSTRUCTION - OCTOBER 25, 2021

NOTE:
1. PROVIDE BRICK ON (4) SIDES, PROVIDE WALL TIES @ 16" MAX SPACING BOTH DIRECTIONS, TYP. ADDITIONAL TIES SHALL BE ADDED TO SUPPORT BRICK LEDGES
2. BRICK VENEER EXTENDS BELOW STEEL PLATES, TYP.
3. SEE STRUCTURAL

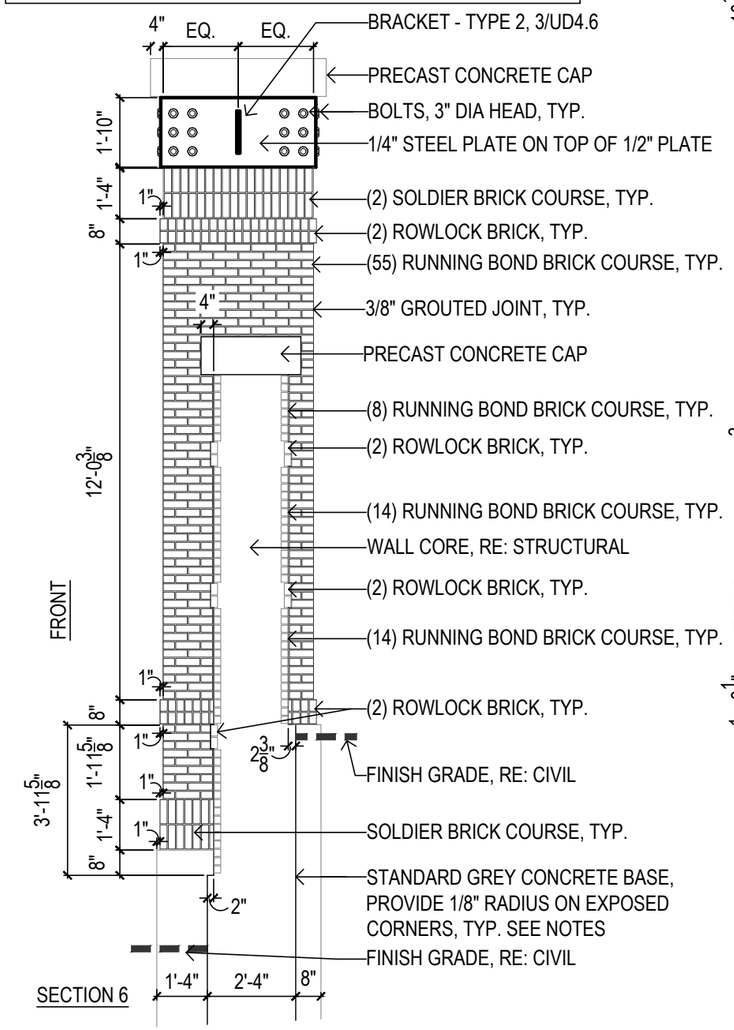

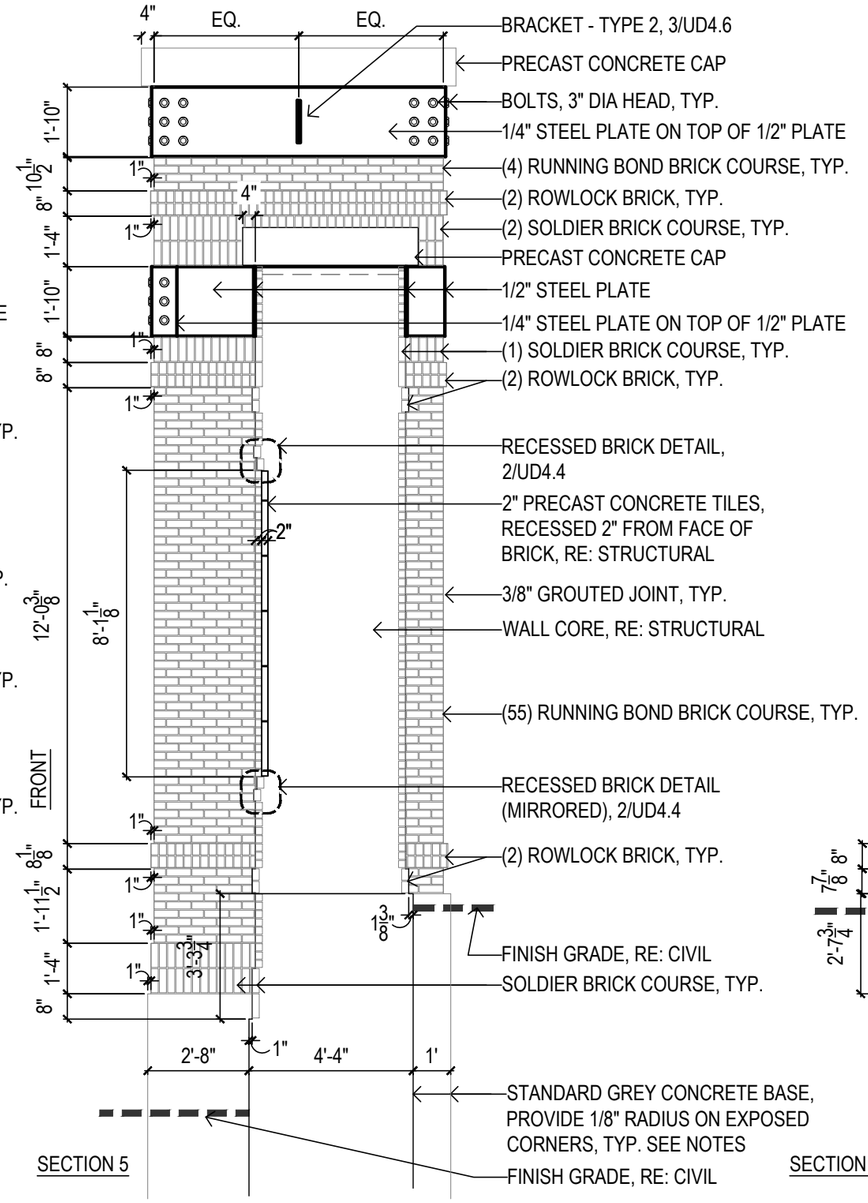

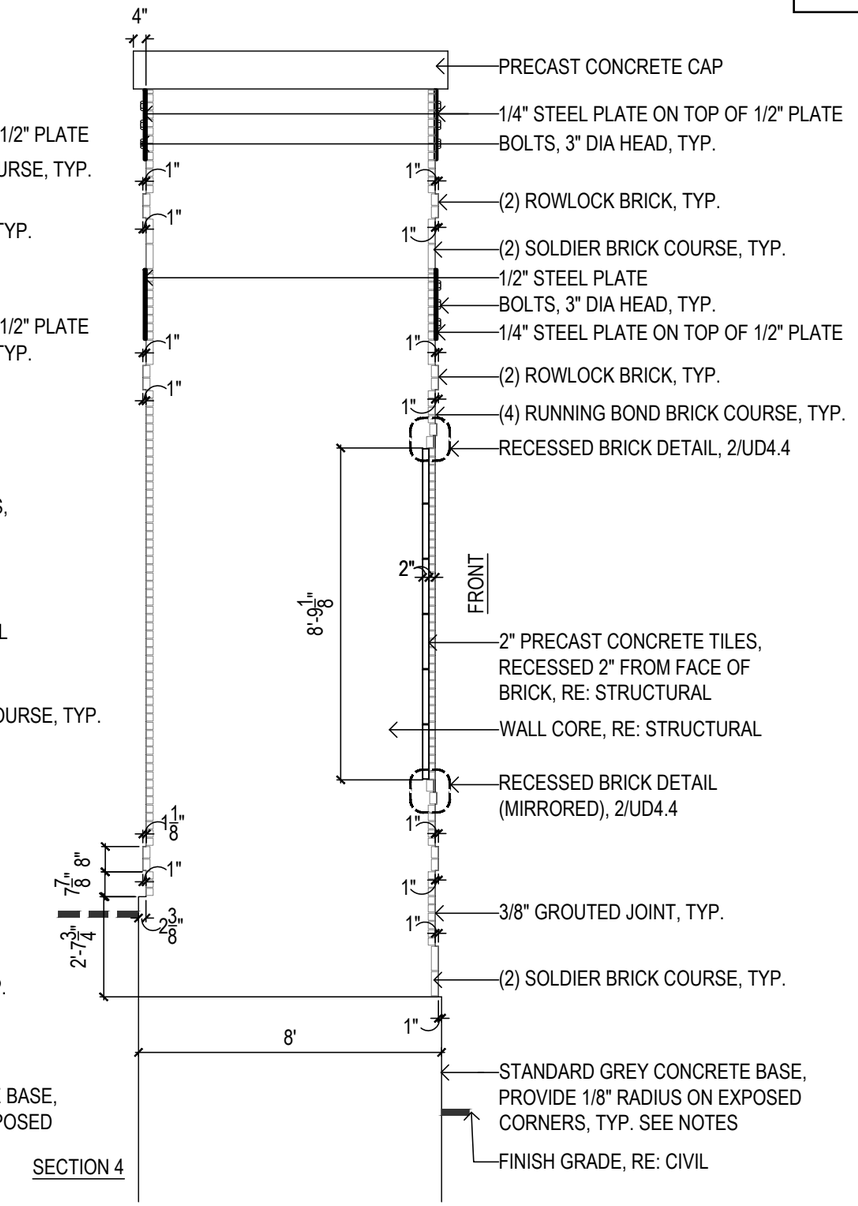

1 CORNER MONUMENT - WALL TYPE 1 - SECTIONS

SCALE: 1/4" = 1'-0"

Print Date: 09/13/2021		Sheet Revisions			Colorado Department of Transportation	As Constructed
Drawing File Name:		Date:	Comments	Init.	1050 Lee Hill Road, Boulder, CO 80302, Phone: 303-546-5676, FAX: 303-444-0751	No Revisions:
Horiz. Scale:	Vert. Scale: As Noted				Region 4 ALG	Revised: REVISED
Unit Information	Unit Leader Initials					Void: VOID
BHA Design Incorporated, 1603 Oakridge Drive, Fort Collins, Colorado 80525, voice: 970.223.7577, www.bhadesign.com						

I-25 EXPR. LANES SEG 5&6 CP5 URBAN DESIGN ELEMENTS MONUMENT WALL DETAILS			Project No./Code
			NHPP 0253-275
Designer: MCB	Structure Numbers	C-17-FX	23019
Detailer: MCB		C-17-FXA	
Sheet Subset: URBAN DSGN	Subset Sheets:	UD4.2	Sheet Number 6

RFC SUBMITTAL - NOT FOR CONSTRUCTION - OCTOBER 25, 2021

NOTE:
1. PRECAST CAP COLOR: DAVIS COLOR - PEBBLE 641
2. CAPS SHALL BE INSTALLED HORIZONTAL AND PLUMB
3. PROVIDE 3/8" GROUTED JOINTS BETWEEN PRECAST TILES AND AT BRICK VENEER, TYP. JOINTS SHALL BE RECESSED 3/8" DEEP, BE CONCAVE/RODDED, COLOR PER SPECS. JOINTS SHALL BE INSTALLED HORIZONTAL AND PLUMB.
4. SEE STRUCTURAL FOR WALL CORE AND REINFORCEMENT
5. DETAILED AND DIMENSIONED SHOP DRAWINGS FOR PRECAST CONCRETE CAPS (INCLUDING THICKNESS, DIMENSIONS, MATERIALS, FINISH) SHALL BE PROVIDED BY CONTRACTOR TO OWNER'S REPRESENTATIVE PRIOR TO FABRICATION.

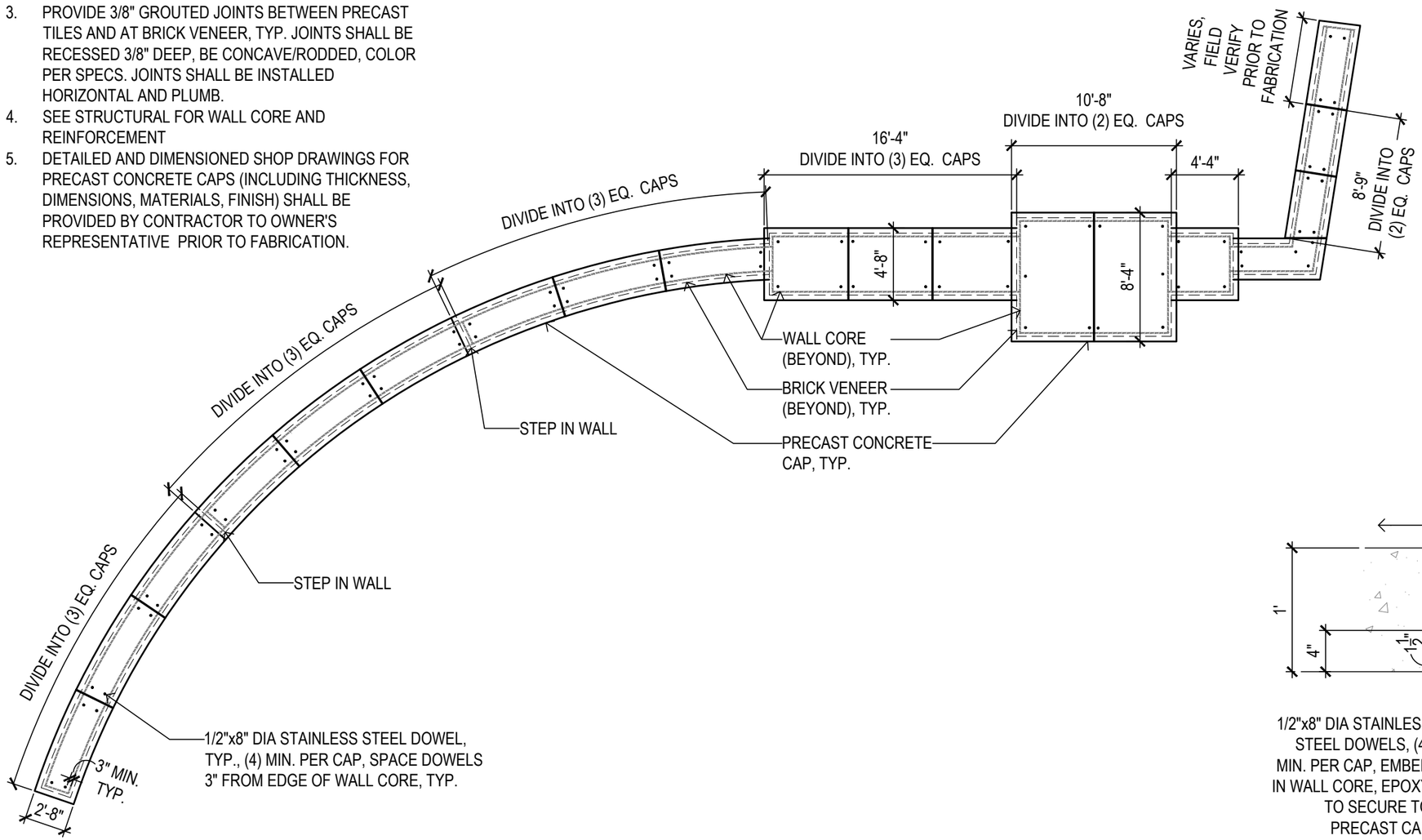

1 PRECAST CAP - PLAN

SCALE: 1/8" = 1'-0"

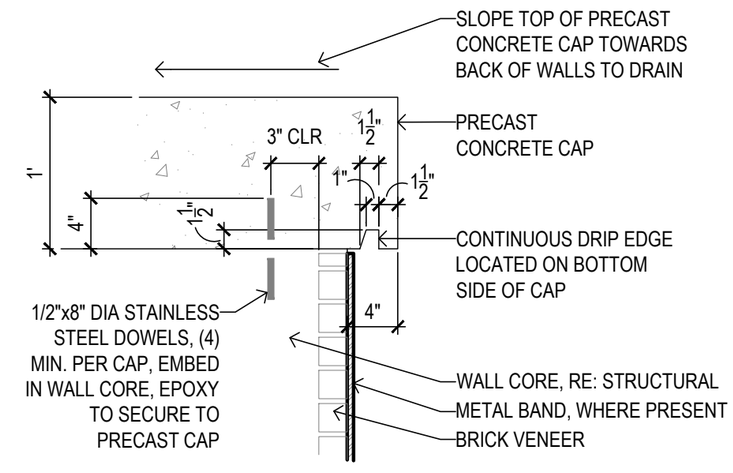

2 PRECAST CAP - ENLARGEMENT

SCALE: 1" = 1'-0"

Print Date: 09/13/2021	Sheet Revisions	Colorado Department of Transportation	As Constructed
Drawing File Name:	Date: / Comments / Init.	1050 Lee Hill Road, Boulder, CO 80302, Phone: 303-546-5676, FAX: 303-444-0751	No Revisions:
Horiz. Scale: / Vert. Scale: As Noted		Region 4 ALG	Revised: REVISED
Unit Information / Unit Leader Initials			Void: VOID

BHA Design Incorporated, 1603 Oakridge Drive, Fort Collins, Colorado 80525, voice: 970.223.7577, www.bhadesign.com

I-25 EXPR. LANES SEG 5&6 CP5
URBAN DESIGN ELEMENTS
MONUMENT WALL DETAILS

Designer: MCB	Structure Numbers	C-17-FX	Project No./Code: NHPP 0253-275
Detailer: MCB		C-17-FXA	23019
Sheet Subset: URBAN DSGN	Subset Sheets:	UD4.3	Sheet Number 6

RFC SUBMITTAL - NOT FOR CONSTRUCTION - OCTOBER 25, 2021

$PLOT_INFO$ $DATE$ $PLTDRVS$ $PENTBLS$ XXX MM/YY XXX MM/YY

NOTES:
1. CONTRACTOR TO PROVIDE SHOP DRAWINGS AND (1) FULL SIZED MOCK UP OF DECORATIVE STAR FOR APPROVAL BY OWNER'S REPRESENTATIVE PRIOR TO FABRICATION OF STARS
2. (20) STARS TOTAL - SEE ELEVATION ON SHEET UD4.0
3. VERTICALLY ALIGN STUDS/BOLTS IN CENTER LINE OF STAR, PROVIDE 3" MIN. CLEAR BETWEEN STUDS/BOLTS
4. SEE STRUCTURAL FOR FINISH

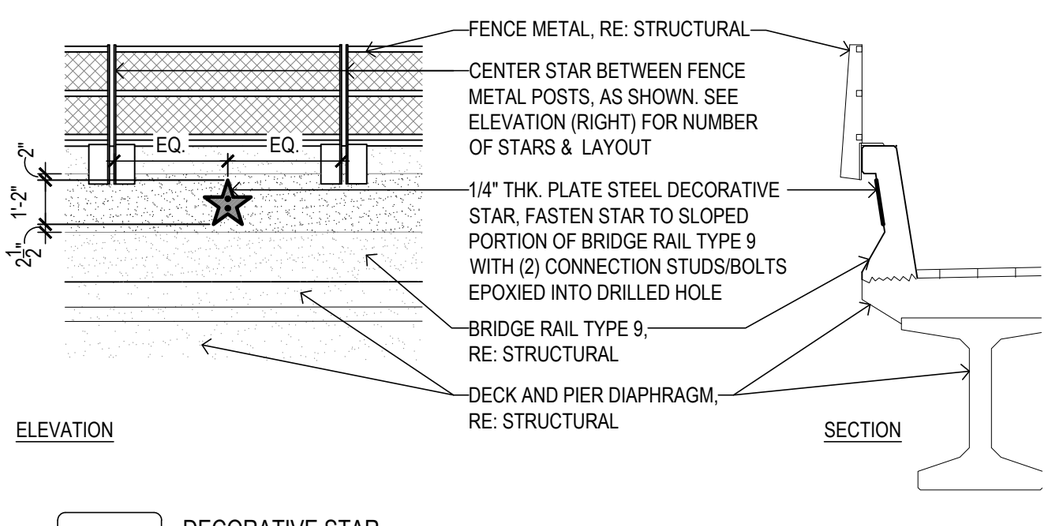

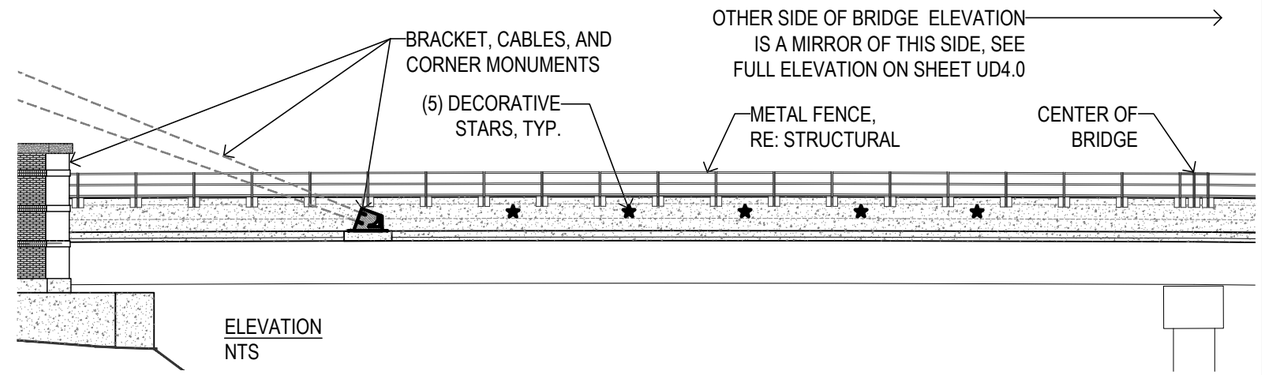

1 DECORATIVE STAR

SCALE: 1/4"=1'-0"

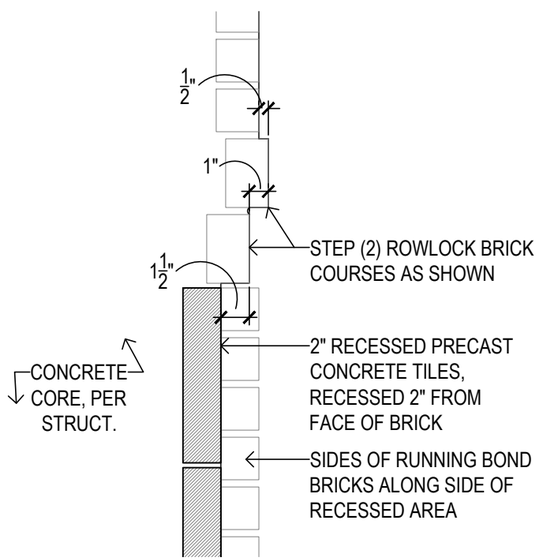

2 RECESSED BRICK DETAIL - ENLARGEMENT

SCALE: 1-1/2"=1'-0"

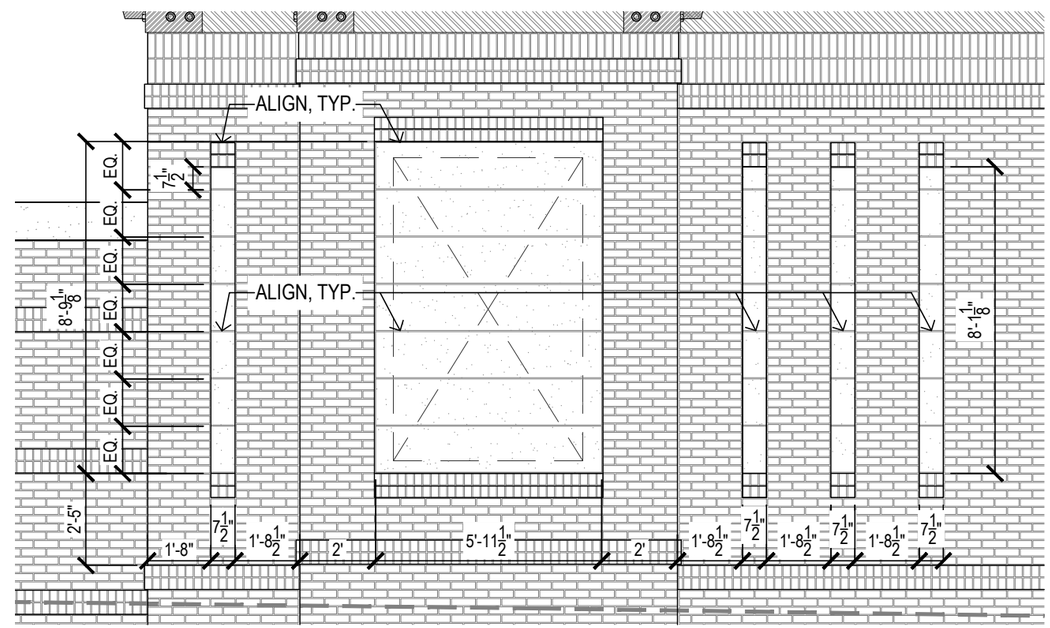

NOTES:
1. PRECAST TILE COLOR: DAVIS COLOR - PEBBLE 641
2. CONTRACTOR TO FIELD MEASURE THE INSTALLED BRICK MASONRY PRIOR TO FABRICATING THE PRECAST CONCRETE TILES
3. PROVIDE 3/8" JOINTS BETWEEN PANELS AND AROUND EDGES OF RECESSED AREAS

3 RECESSED PRECAST CONCRETE TILES

SCALE: 1:4

Print Date: 09/13/2021	Sheet Revisions	Colorado Department of Transportation	As Constructed	I-25 EXPR. LANES SEG 5&6 CP5 URBAN DESIGN ELEMENTS URBAN DESIGN DETAILS	Project No./Code
Drawing File Name:	Date: / Comments / Init.	1050 Lee Hill Road, Boulder, CO 80302, Phone: 303-546-5676, FAX: 303-444-0751	No Revisions:		NHPP 0253-275
Horiz. Scale: / Vert. Scale: As Noted		Region 4 ALG	Revised: REVISED	Designer: MCB / Structure Numbers C-17-FX	23019
Unit Information / Unit Leader Initials			Void: VOID	Detailer: MCB / C-17-FXA	Sheet Number 61
BHA Design Incorporated, 1603 Oakridge Drive, Fort Collins, Colorado 80525, voice: 970.223.7577, www.bhadesign.com				Sheet Subset: URBAN DSGN / Subset Sheets: UD4.4	

$PLOT_INFO$ $DATE$ $PLTDRVS$ $PENTBLS$ XXX XXX MM/YY MM/YY

RFC SUBMITTAL - NOT FOR CONSTRUCTION - OCTOBER 25, 2021

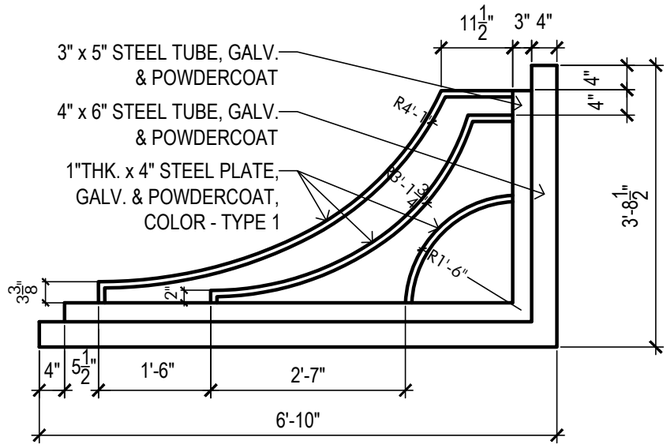

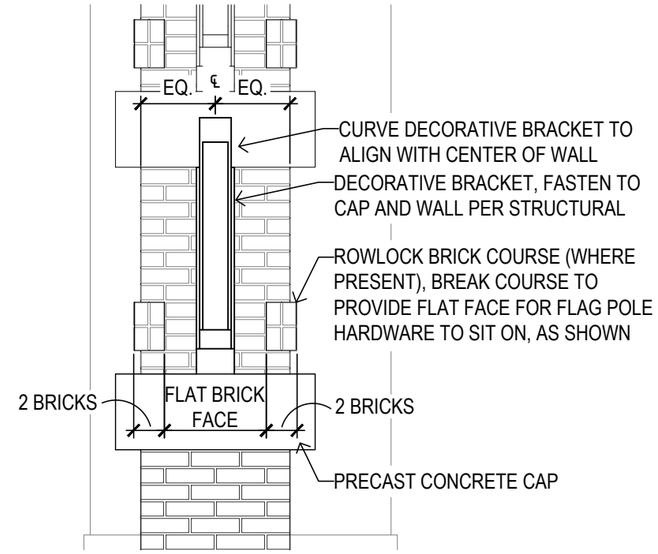

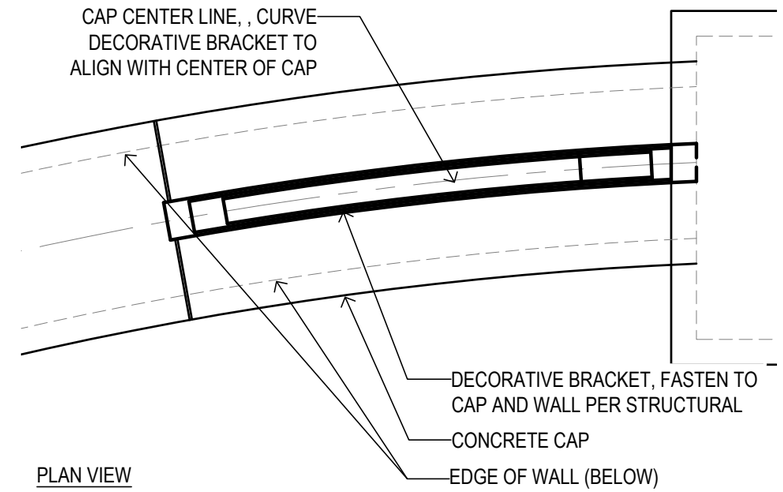

1 DECORATIVE BRACKET - TYPE 1

SCALE: 1/2"=1'-0"

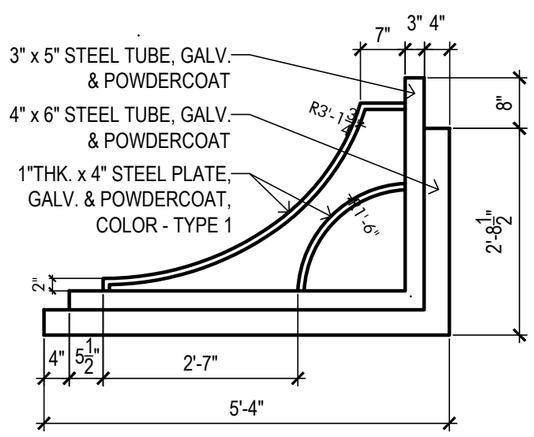

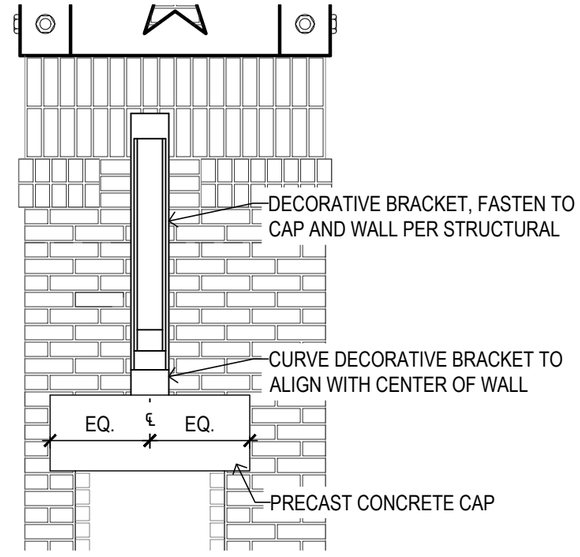

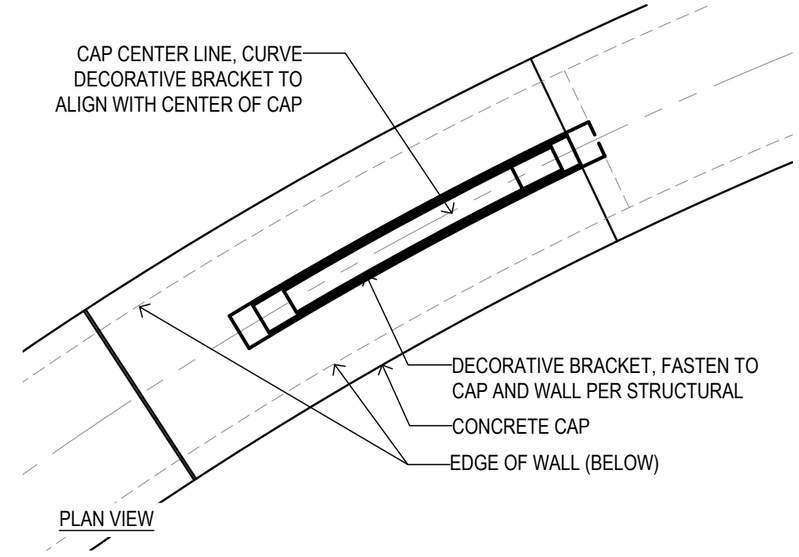

2 DECORATIVE BRACKET - TYPE 2

SCALE: 1/2"=1'-0"

Print Date: 09/13/2021	Sheet Revisions	Colorado Department of Transportation	As Constructed
Drawing File Name:	Date: / Comments / Init.	1050 Lee Hill Road, Boulder, CO 80302, Phone: 303-546-5676, FAX: 303-444-0751	No Revisions:
Horiz. Scale: / Vert. Scale: As Noted		Region 4 ALG	Revised: REVISED
Unit Information / Unit Leader Initials			Void: VOID

BHA Design Incorporated, 1603 Oakridge Drive, Fort Collins, Colorado 80525, voice: 970.223.7577, www.bhadesign.com

I-25 EXPR. LANES SEG 5&6 CP5
URBAN DESIGN ELEMENTS
URBAN DESIGN DETAILS

Designer: MCB	Structure Numbers	C-17-FX	Project No./Code: NHPP 0253-275
Detailer: MCB		C-17-FXA	23019
Sheet Subset: URBAN DSGN	Subset Sheets:	UD4.5	Sheet Number 61

$PLOT_INFO$ $DATE$ $PLTDRVS$ $PENTBLS$ MM/YY XXX

RFC SUBMITTAL - NOT FOR CONSTRUCTION - OCTOBER 25, 2021

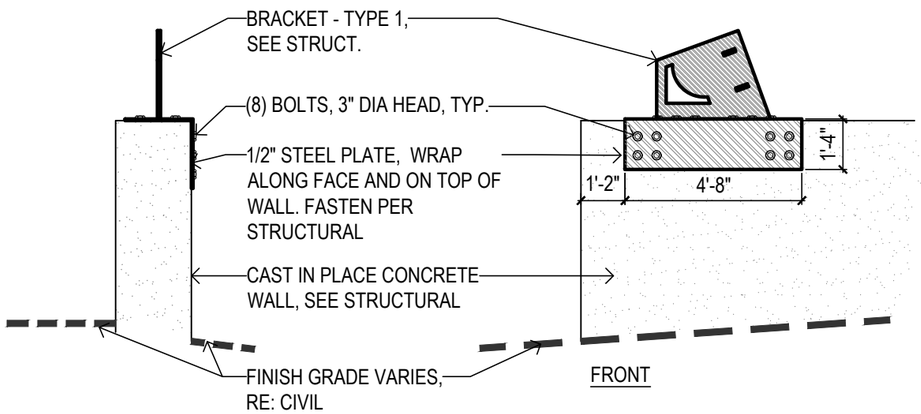

1 STEEL PLATE WRAP ON FACE OF LOWER WALL

SCALE: 1/4" = 1'-0"

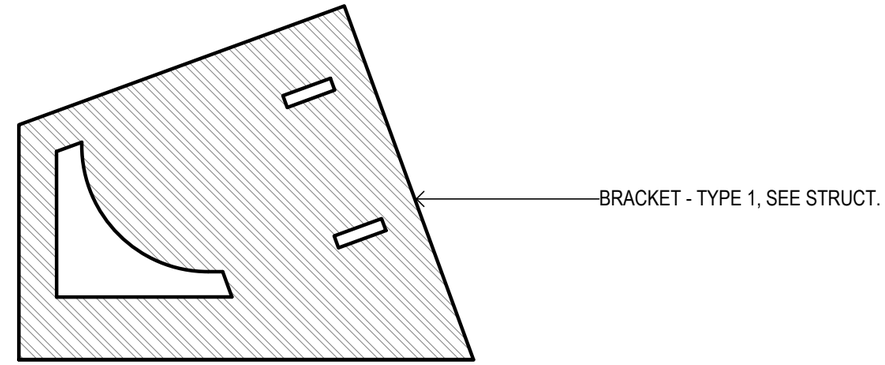

2 BRACKET - TYPE 1

SCALE: NTS

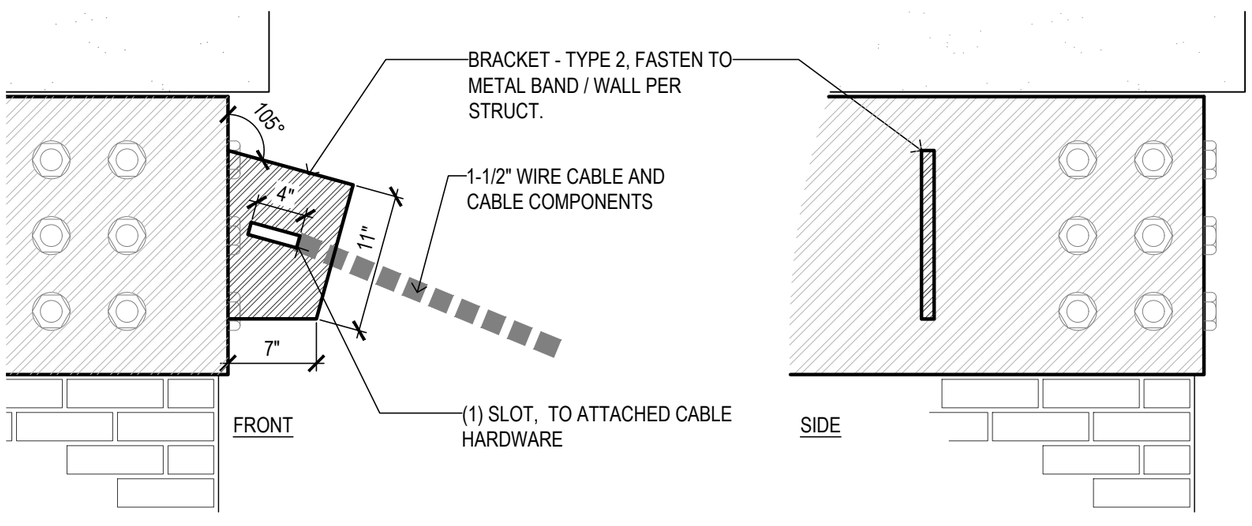

3 BRACKET - TYPE 2

SCALE: 1" = 1'-0"

Print Date: 09/13/2021	Sheet Revisions	Colorado Department of Transportation	As Constructed
Drawing File Name:	Date: / Comments / Init.	1050 Lee Hill Road, Boulder, CO 80302, Phone: 303-546-5676, FAX: 303-444-0751	No Revisions:
Horiz. Scale: / Vert. Scale: As Noted		Region 4 ALG	Revised: REVISED
Unit Information / Unit Leader Initials			Void: VOID

BHA Design Incorporated, 1603 Oakridge Drive, Fort Collins, Colorado 80525, voice: 970.223.7577, www.bhadesign.com

I-25 EXPR. LANES SEG 5&6 CP5
URBAN DESIGN ELEMENTS
URBAN DESIGN DETAILS

Designer: MCB | Structure Numbers: C-17-FX, C-17-FXA
Detailer: MCB
Sheet Subset: URBAN DSGN | Subset Sheets: UD4.6

Project No./Code: NHPP 0253-275
23019
Sheet Number 64

RFC SUBMITTAL - NOT FOR CONSTRUCTION - OCTOBER 25, 2021

$PENTBLS$ $PLTDRVS$ $PLOT_INFO$ $DATE$

XXX MM/YY XXX MM/YY

NOTES:
1. 4" THK. ALUMINUM REVERSE PAN CHANNEL LETTERS WITH CLOSE BACK
2. PIN MOUNT 1/2" OFFSET FROM WALL
3. PANTED: MATTEWS ACRYLIC POLYEWRETHANE, COLOR TO MATCH METAL BANDS ON MONUMENT WALL
5. FONT: LUCIDA CALLIGRAPHY
6. CONTRACTOR TO PROVIDE SHOP DRAWINGS FOR SIGNAGE

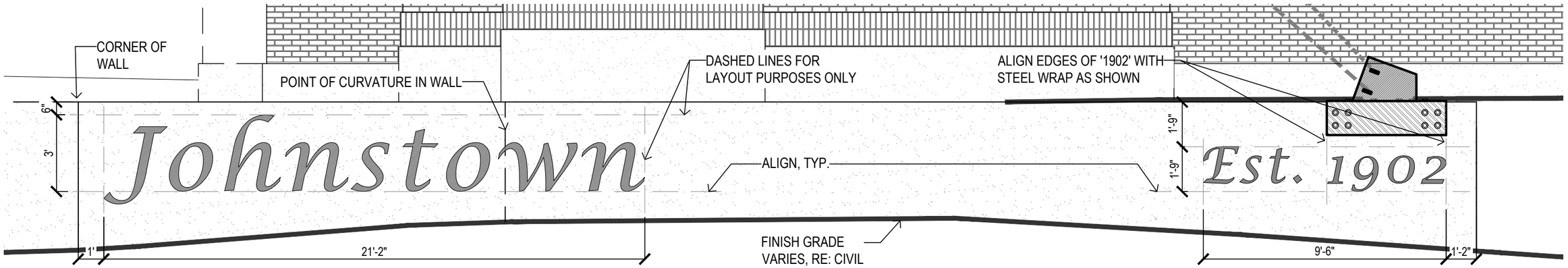

1 'JOHNSTOWN' SIGN - TYPE 1 (ELEVATION)

SCALE: 1/4"=1'-0"

NOTES:
1. FONT: LUCIDA CALLIGRAPHY
2. SEE PRECAST CAP DETAILS, UD 4.1

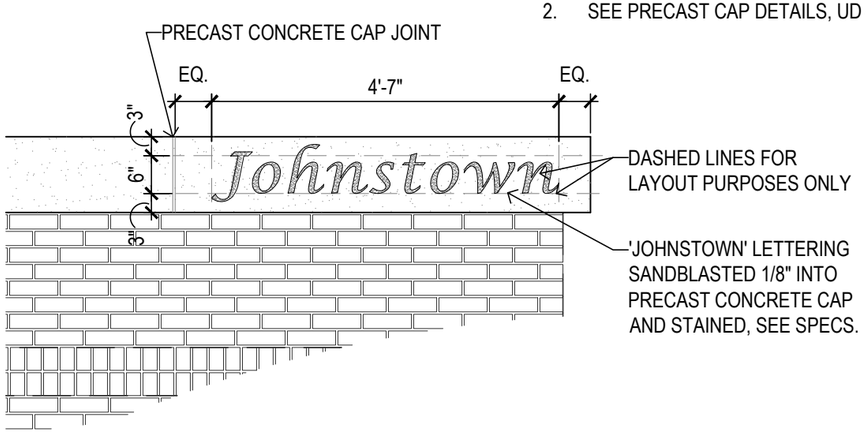

2 'JOHNSTOWN' SIGN - TYPE 2

SCALE: 1/2"=1'-0"

Print Date: 09/13/2021		Sheet Revisions			Colorado Department of Transportation	As Constructed	I-25 EXPR. LANES SEG 5&6 CP5 URBAN DESIGN ELEMENTS URBAN DESIGN DETAILS		Project No./Code
Drawing File Name:		Date:	Comments	Init.	1050 Lee Hill Road, Boulder, CO 80302, Phone: 303-546-5676, FAX: 303-444-0751	No Revisions:			NHPP 0253-275
Horiz. Scale:	Vert. Scale: As Noted				Region 4 ALG	Revised: REVISED	Designer: MCB	Structure Numbers C-17-FX	23019
Unit Information	Unit Leader Initials					Void: VOID	Detailer: MCB	C-17-FXA	
BHA Design Incorporated, 1603 Oakridge Drive, Fort Collins, Colorado 80525, voice: 970.223.7577, www.bhadesign.com							Sheet Subset: URBAN DSGN	Subset Sheets: UD4.7	Sheet Number 65

$PLOT_INFO$ $DATE$ $PLTDRVS$ $PENTBLS$ XXX MM/YY XXX MM/YY

RFC SUBMITTAL - NOT FOR CONSTRUCTION - OCTOBER 25, 2021

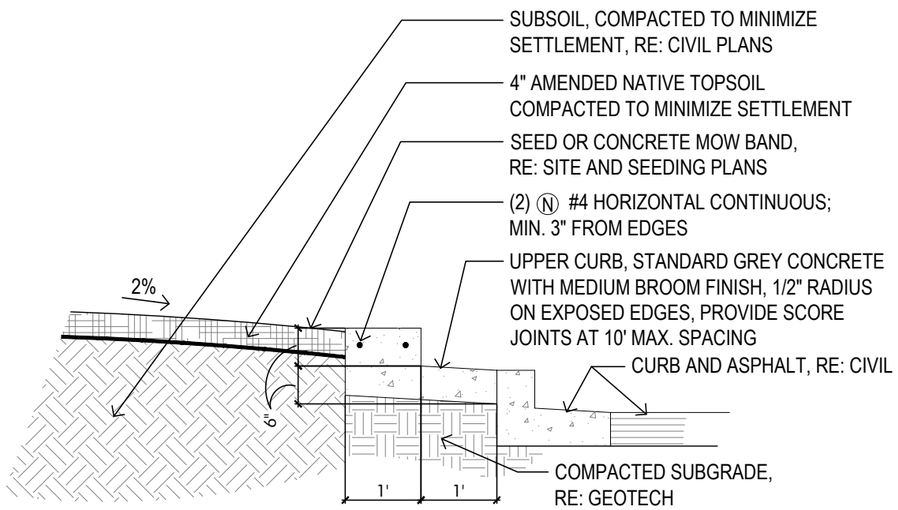

1 CURB (SPECIAL)

SCALE: 1/2"=1'-0"

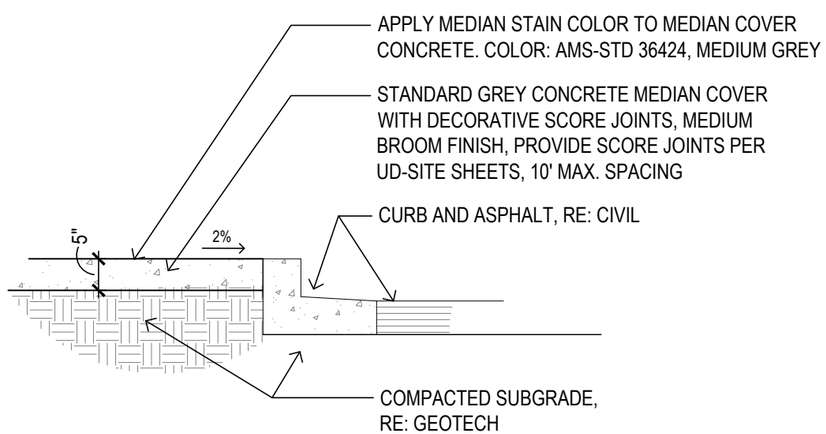

2 MEDIAN COVER MATERIAL (CONCRETE)

SCALE: 1/2"=1'-0"

NOTES:

1. SAW CUT OR TOOLED JOINTS TO BE LOCATED AT 8' SPACING
2. PROVIDE MEDIUM BROOM FINISH ON TOP OF MOW STRIP, PURPENDICULAR TO DIRECTION OF MOW STRIP TYP.

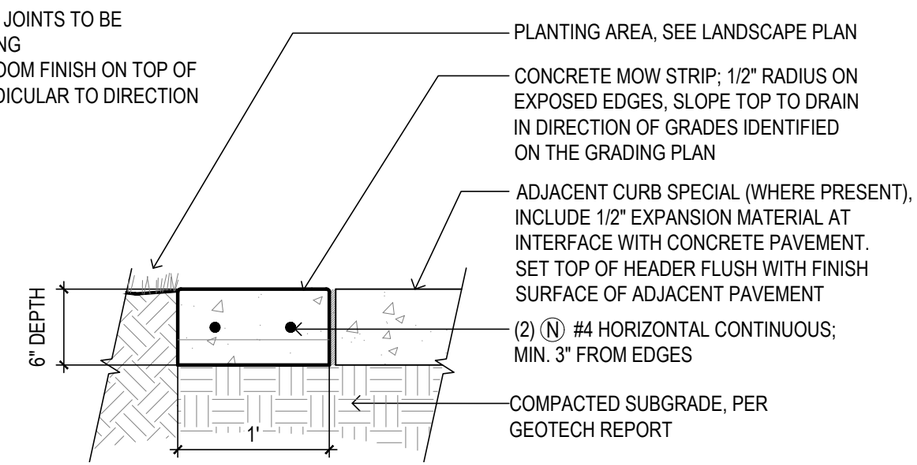

3 CONCETE MOW BAND

SCALE: 1"=1'-0"

Print Date: 09/13/2021	Sheet Revisions	Colorado Department of Transportation	As Constructed	I-25 EXPR. LANES SEG 5&6 CP5 URBAN DESIGN ELEMENTS URBAN DESIGN DETAILS			Project No./Code
Drawing File Name:	Date: / Comments / Init.	1050 Lee Hill Road, Boulder, CO 80302, Phone: 303-546-5676, FAX: 303-444-0751	No Revisions:				NHPP 0253-275
Horiz. Scale: / Vert. Scale: As Noted		Region 4 ALG	Revised: REVISED	Designer: MCB	Structure Numbers	C-17-FX	23019
Unit Information / Unit Leader Initials			Void: VOID	Detailer: MCB		C-17-FXA	
BHA Design Incorporated, 1603 Oakridge Drive, Fort Collins, Colorado 80525, voice: 970.223.7577, www.bhadesign.com				Sheet Subset: URBAN DSGN	Subset Sheets:	UD4.8	Sheet Number 66

RFC SUBMITTAL - NOT FOR CONSTRUCTION - OCTOBER 25, 2021

$PLOT_INFO$ $DATE$ $PLTDRVS$ $PENTBLS$ XXX MM/YY XXX MM/YY

NOTES:

1. REFER TO IRRIGATION DRAWINGS FOR LOCATIONS, DEPTHS ALIGNMENT OF IRRIGATION SLEEVES FEEDING PLANTER BOXES.
2. OWNER'S REP. SHALL VERIFY PLANTER BOX LOCATION AND ORIENTATION OF DRAINAGE HOLE PRIOR TO FILLING TRENCH WITH AGGREGATE AND FINAL PLACEMENT OF PLANTER BOXES.
3. CONTRACTOR SHALL COORDINATE WITH MANUFACTURER SO THAT DRAINAGE HOLE AND IRRIGATION LINE HOLE WILL WORK WITH FINAL PLANTER BOX INSTALLATION LOCATIONS. FIELD DRILLING PLANTER BOXES WILL NOT BE ALLOWED.

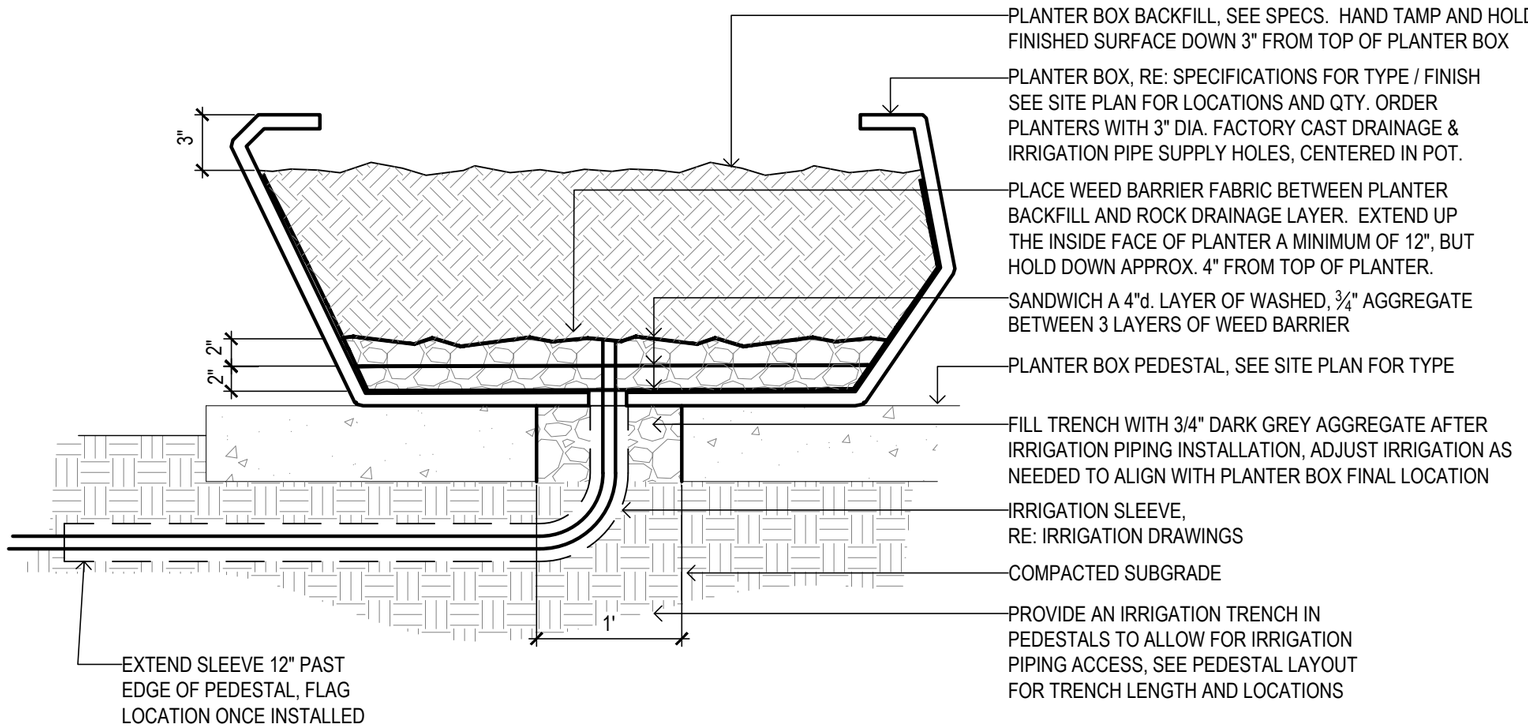

1 PLANTER BOX IRRIGATION DETAIL

SCALE: 1"=1'-0"

XXX MM/YY
XXX MM/YY
XXX MM/YY
XXX MM/YY
XXX MM/YY
XXX MM/YY
$PENTBLS$
$PLTDRVS$
$PLOT_INFO$
$DATE$

Print Date: 09/13/2021	Sheet Revisions				
Drawing File Name:	Date:	Comments	Init.		
Horiz. Scale: Vert. Scale: As Noted					
Unit Information Unit Leader Initials					

BHA Design Incorporated
1603 Oakridge Drive
Fort Collins, Colorado 80525
voice: 970.223.7577
www.bhadesign.com

Colorado Department of Transportation
1050 Lee Hill Road
Boulder, CO 80302
Phone: 303-546-5676
FAX: 303-444-0751
Region 4 ALG

As Constructed					
No Revisions:		I-25 EXPR. LANES SEG 5&6 CP5 URBAN DESIGN ELEMENTS URBAN DESIGN DETAILS			Project No./Code
Revised:	REVISED	Designer: MCB	Structure Numbers	C-17-FX	NHPP 0253-275
		Detailer: MCB		C-17-FXA	23019
Void:	VOID	Sheet Subset: URBAN DSGN	Subset Sheets:	UD4.9	Sheet Number 6

RFC SUBMITTAL - NOT FOR CONSTRUCTION - OCTOBER 25, 2021

GENERAL DESCRIPTION

A FULLY AUTOMATED SPRINKLER, BUBBLER, AND DRIP IRRIGATION SYSTEM IRRIGATES SEED, TREES, AND PLANTER POTS. POP-UP SPRINKLERS IRRIGATE SEED. BUBBLERS IRRIGATE TREES IN SEED AREAS. DRIP IRRIGATES PLANTER POTS.

MUNICIPAL (POTABLE) WATER IS USED FOR IRRIGATION. THE POINT-OF-CONNECTION (P.O.C.) IS SHOWN ON THE PLANS IMMEDIATELY DOWNSTREAM OF THE IRRIGATION WATER METER (THE METER IS TO BE INSTALLED BY OTHERS). REFER TO CIVIL PLANS FOR IRRIGATION WATER METER DETAIL AND DESIGN.

PEDESTAL MOUNT IRRIGATION CONTROLLERS USING REMOTE DATA ACCESS FOR CLOUD BASED CENTRAL CONTROL MUST BE INSTALLED UNDER THIS CONTRACT.

A RAIN SENSOR IS REQUIRED FOR EACH CONTROLLER TO SHUT DOWN IRRIGATION DUE TO RAINFALL EVENTS. A FLOW SENSOR AND MASTER VALVE WILL BE INSTALLED TO FACILITATE AUTOMATIC SHUT DOWN OF THE IRRIGATION SYSTEM IN THE EVENT OF A MAINLINE PIPE BREAK.

ISOLATION GATE VALVES PERMIT THE ISOLATION OF SECTIONS OF THE SYSTEM FOR REPAIRS OR MAINTENANCE. QUICK COUPLING VALVES HAVE BEEN PROVIDED THROUGHOUT THE SITE FOR INCIDENTAL WATERING.

GENERAL NOTES

1. THE SYSTEM DESIGN ASSUMES A MINIMUM STATIC PRESSURE AND MAXIMUM FLOW DEMAND AS SHOWN ON THE PLANS FOR EACH POINT-OF-CONNECTION (P.O.C.). THE CONTRACTOR IS RESPONSIBLE FOR VERIFYING PRESSURE AND FLOW ON SITE PRIOR TO CONSTRUCTION AND REPORT ANY DISCREPANCIES TO THE OWNER'S REPRESENTATIVE.
2. READ THOROUGHLY AND BECOME FAMILIAR WITH THE SPECIFICATIONS AND INSTALLATION DETAILS FOR THIS AND RELATED WORK PRIOR TO CONSTRUCTION.
3. COORDINATE UTILITY LOCATES ("CALL BEFORE YOU DIG") OF UNDERGROUND UTILITIES PRIOR TO CONSTRUCTION.
4. DO NOT PROCEED WITH THE INSTALLATION OF THE IRRIGATION SYSTEM WHEN IT IS OBVIOUS IN THE FIELD THAT OBSTRUCTIONS OR GRADE DIFFERENCES EXIST THAT MIGHT NOT HAVE BEEN CONSIDERED IN THE ENGINEERING, OR IF DISCREPANCIES IN CONSTRUCTION DETAILS, LEGEND, NOTES, OR SPECIFICATIONS ARE DISCOVERED. BRING ALL SUCH OBSTRUCTIONS OR DISCREPANCIES TO THE ATTENTION OF THE OWNER'S REPRESENTATIVE.
5. THE DRAWINGS ARE DIAGRAMMATIC. THEREFORE, THE FOLLOWING SHOULD BE NOTED:

   A. IRRIGATION COMPONENTS MAY BE SHOWN OUTSIDE PLANTING AREAS FOR CLARITY. AVOID CONFLICTS BETWEEN THE IRRIGATION SYSTEM, PLANTING MATERIALS, AND ARCHITECTURAL FEATURES. INSTALL IRRIGATION PIPE AND WIRING IN LANDSCAPED AREAS WHEREVER POSSIBLE.

   B. USE ONLY STANDARD TEES AND ELBOW FITTINGS. USE OF CROSS TYPE FITTINGS IS NOT PERMITTED.
6. PROVIDE THE FOLLOWING COMPONENTS TO THE OWNER PRIOR TO THE COMPLETION OF THE PROJECT:

   A. TWO OPERATING KEYS FOR EACH TYPE OF MANUALLY OPERATED VALVE.
7. SELECT NOZZLES FOR SPRINKLERS WITH ARCS WHICH PROVIDE COMPLETE AND UNIFORM COVERAGE WITH MINIMUM OVERSPRAY FOR THE SITE CONDITIONS. CAREFULLY ADJUST THE RADIUS OF THROW AND ARC OF EACH SPRINKLER TO PROVIDE THE BEST PERFORMANCE.
8. THE IRRIGATION CONTRACTOR IS RESPONSIBLE FOR THE INSTALLATION OF IRRIGATION SLEEVING. SLEEVES ARE TO BE INSTALLED FOR BOTH PIPING AND ELECTRICAL WIRING AT EACH HARDSCAPE CROSSING. COORDINATE INSTALLATION OF SLEEVING WITH OTHER TRADES. ANY PIPE OR WIRE WHICH PASSES BENEATH EXISTING HARDSCAPE WHERE SLEEVING WAS NOT INSTALLED REQUIRES HORIZONTAL BORING BY THE IRRIGATION CONTRACTOR.
9. CONNECT ELECTRICAL POWER TO THE IRRIGATION CONTROL SYSTEM IN ACCORDANCE WITH THE NATIONAL ELECTRIC CODE AND ALL APPLICABLE LOCAL ELECTRIC UTILITY CODES.
10. WITH REGARD TO PIPE SIZING, THE FOLLOWING SHOULD BE NOTED:

    A. IF A SECTION OF UNSIZED PIPE IS LOCATED BETWEEN TWO IDENTICALLY SIZED SECTIONS, THE UNSIZED PIPE IS THE SAME NOMINAL SIZE AS THE TWO SIZED SECTIONS. THE UNSIZED PIPE SHOULD NOT BE CONFUSED WITH THE DEFAULT PIPE SIZE NOTED IN THE LEGEND.
11. INSTALL VAN NOZZLES WHERE SPRAY ANGLES ARE LESS OR GREATER THAN WHAT A FIXED SPRAY NOZZLE CAN IRRIGATE WITHOUT EXCESSIVE OVERSPRAY.

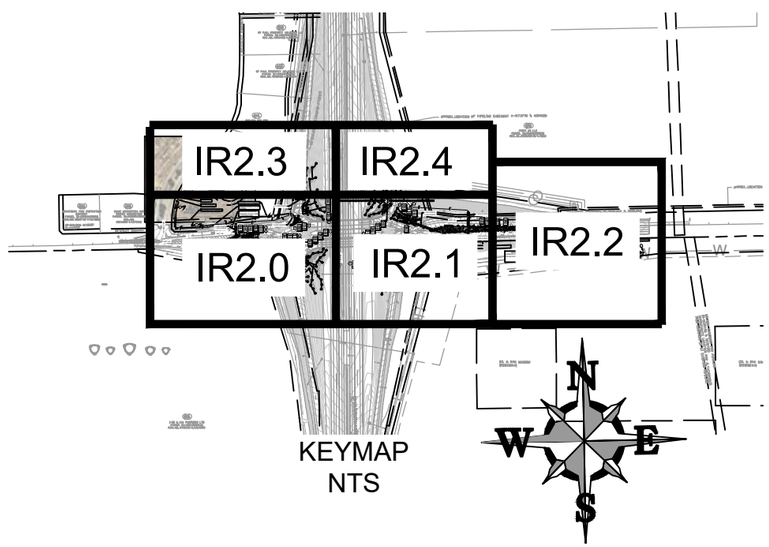

KEYMAP
NTS

Aqua Engineering Inc.
Innovative Water Solutions
375 E. Horsetooth Road, Building 2-202
Fort Collins, CO 80525-3196
970.229.9668
www.aquaengineering.com

Print Date:	Sheet Revisions	Colorado Department of Transportation	As Constructed	I-25 EXPR. LANES SEG 5&6 CP5 URBAN DESIGN ELEMENTS IRRIGATION COVER SHEET	Project No./Code
Drawing File Name:	Date: / Comments / Init.	1050 Lee Hill Road, Boulder, CO 80302, Phone: 303-546-5676, FAX: 303-444-0751	No Revisions:		NHPP 0253-275
Horiz. Scale: / Vert. Scale: As Noted			Revised:	Designer: JHK / Structure Numbers C-17-FX	23019
Unit Information / Unit Leader Initials		Region 4 / ALG	Void:	Detailer: JHK / C-17-FXA; Sheet Subset: IRRIGATION / Subset Sheets: of	Sheet Number IR1.06

RFC SUBMITTAL - NOT FOR CONSTRUCTION - OCTOBER 25, 2021

LEGEND

SLEEVING: CLASS 200 PVC
*SIZE AND QUANTITY PER PLAN

MAINLINE PIPE: CLASS 200 PVC (SIZE AS SHOWN)

LATERAL PIPE: CLASS 200 PVC (SIZE AS SHOWN)
*1" UNLESS OTHERWISE NOTED

UNCONNECTED PIPE CROSSING

POINT-OF-CONNECTION (P.O.C.)

WATER METER (RE: CIVIL)

WINTERIZATION ASSEMBLY

BACKFLOW PREVENTION ASSEMBLY: FEBCO 825YA SIZED PER POC ON PLAN.
*INSTALLED IN STRONGBOX SBBC ALUMINUM BACKFLOW ENCLOSURE (SIZE AS REQUIRED)

MASTER VALVE ASSEMBLY: 1-INCH RAIN BIRD PEB

FLOW SENSOR ASSEMBLY: 1-INCH RAIN BIRD FS100P

BLOW OUT ASSEMBLY: REFER TO DETAIL

ISOLATION GATE VALVE
*MODEL: NIBCO T11K OR EQUAL
*SIZE OF GATE VALVE TO MATCH MAINLINE SIZE

QUICK COUPLING VALVE: RAIN BIRD 44LRC

REMOTE CONTROL VALVE: RAIN BIRD PEB

DRIP REMOTE CONTROL VALVE: RAIN BIRD XCZ-100-PRB-LC

POP-UP SPRINKLER: RAIN BIRD MPR SERIES ON RD-12-P30 @ 30 PSI

RADIUS: 5'	FLOW (GPM): Q - 0.10	H - 0.20	F - 0.41
RADIUS: 8'	FLOW (GPM): Q - 0.26	H - 0.52	F - 1.05
RADIUS: 10'	FLOW (GPM): Q - 0.39	H - 0.79	F - 1.58
RADIUS: 12'	FLOW (GPM): Q - 0.65	H - 1.30	F - 2.60
RADIUS: 15'	FLOW (GPM): Q - 0.92	H - 1.85	F - 3.70

POP-UP GEAR-DRIVEN ROTORS: RAIN BIRD 5006 W/PRS-SAM AND MPR NOZZLES
NOZZLE PRESSURE: 35 PSI

30 H — ARC - QUARTER (Q), HALF (H), FULL (F)
— NOZZLE NUMBER

NOZZLES USED:

NOZZLE: 25Q	RADIUS: 24	FLOW: 0.88
NOZZLE: 25H	RADIUS: 24	FLOW: 1.73
NOZZLE: 25F	RADIUS: 24	FLOW: 3.82

POP-UP BUBBLER ASSEMBLY
*RAIN BIRD 1401 BUBBLER NOZZLE ON RAIN BIRD 1804-SAM-PRS
*0.25 GPM PER NOZZLE, ONE PER TREE

A B
IRRIGATION CONTROLLER
RAIN BIRD ESP-LXMEF PLASTIC WALL MOUNT
CONTROLLER A: 24 STATIONS, 17 STATIONS USED
CONTROLLER B: 32 STATIONS, 27 STATIONS USED
INCLUDE RAIN BIRD IQ4 INCLUDING 4G CELL MODEM
INSTALL EXPANSION MODULES AS NEEDED
PLACE WITHIN STRONGBOX SB SERIES ENCLOSURE (SIZED AS NECESSARY)
COORDINATE ORDERING WITH PAUL REED (PHONE: 352-214-4199)

A-1
15
1"
INDICATES CONTROLLER AND STATION NUMBER
INDICATES LATERAL DISCHARGE IN GPM
INDICATES REMOTE CONTROL VALVE SIZE IN INCHES

VALVE BOXES: RAIN BIRD VB SERIES (LID COLOR: GREEN) OR EQUAL

FLAG NOTES

1. EXCAVATE AND EXPOSE EXISTING COPPER PIPE STUB-OUT (SIZED PER POC SIZE INDICATED ON PLAN) AT THE APPROXIMATE LOCATION SHOWN DOWNSTREAM OF METER (INSTALLED BY OTHERS, RE: CIVIL). CONNECT TO COPPER PIPE AND EXTEND TYPE K COPPER PIPE TO WINTERIZATION ASSEMBLY. COORDINATE EXACT PLACEMENT OF WINTERIZATION, BACKFLOW, MASTER VALVE, AND FLOW SENSOR ASSEMBLIES WITH THE OWNER'S REPRESENTATIVE ON SITE PRIOR TO CONSTRUCTION. ALL EQUIPMENT TO BE INSTALLED WITHIN UTILITY EASEMENT.
2. INSTALL PEDESTAL MOUNT IRRIGATION CONTROLLER AT THE APPROXIMATE LOCATION INDICATED. ELECTRICAL POWER WILL BE PROVIDED TO WITHIN 5' OF CONTROLLER LOCATION. COORDINATE EXACT LOCATION OF ELECTRICAL POWER WITH THE ELECTRICAL DRAWINGS AND NECESSARY TRADES ON SITE. PROVIDE ALL NECESSARY CONDUIT AND CONDUCTORS BETWEEN ELECTRICAL POWER SOURCE AND IRRIGATION CONTROLLER AND MAKE ALL NECESSARY CONNECTIONS. COORDINATE EXACT PLACEMENT OF CONTROLLER WITH THE OWNER'S REPRESENTATIVE ON SITE PRIOR TO CONSTRUCTION.
3. WIRE MASTER VALVE AND FLOW SENSOR TO IRRIGATION CONTROLLER PER MANUFACTURER'S GUIDELINES. PROGRAM CONTROLLER TO CLOSE MASTER VALVE IF FLOW EXCEEDS 150% OF POC FLOW INDICATED ON PLANS.
4. INSTALL PVC LATERAL PIPE AND DRIP TO PLANTER POTS. THESE ITEMS NOT SHOWN FOR SCHEMATIC CLARITY. REFER TO PLANTER POT DETAIL FOR ADDITIONAL INFORMATION. COORDINATE PLANTER POT IRRIGATION WITH THE OWNER'S REPRESENTATIVE ON SITE PRIOR TO CONSTRUCTION.
5. INSTALL THREE CONTROL WIRES AND ONE COMMON WIRE FROM THE RESPECTIVE CONTROLLER TO EACH OF THE REMOTE CONTROL VALVE ASSEMBLIES INDICATED FOR USE AS SPARE WIRE IN CASE OF CONTROL WIRE FAILURE. PROVIDE A 3-FOOT COILED LENGTH OF EACH SPARE WIRE IN ALL REMOTE CONTROL VALVE BOXES. ROUTE SPARE WIRE IN SUCH A MANNER THAT WIRE IS ROUTED WITH ALL MAINLINE PIPES.
6. ROUTE LATERAL PIPE AROUND WALL. ROUTING SHOWN IS FOR SCHEMATIC CLARITY ONLY.
7. INSTALL MAINLINE WITHIN ROW AND UTILITY EASEMENT IN APPROXIMATE LOCATION. COORDINATE EXACT ROUTING AND SITE REPAIRS WITH TOWN OF JOHNSTOWN REPRESENTATIVE ON SITE PRIOR TO CONSTRUCTION.

Aqua Engineering Inc.
Innovative Water Solutions
375 E. Horsetooth Road, Building 2-202
Fort Collins, CO 80525-3196
970.229.9668
www.aquaengineering.com

Print Date:		Sheet Revisions			Colorado Department of Transportation	As Constructed	I-25 EXPR. LANES SEG 5&6 CP5 URBAN DESIGN ELEMENTS IRRIGATION LEGEND & FLAG NOTES	Project No./Code
Drawing File Name:		Date:	Comments	Init.	1050 Lee Hill Road, Boulder, CO 80302, Phone: 303-546-5676, FAX: 303-444-0751	No Revisions:		NHPP 0253-275
Horiz. Scale:	Vert. Scale: As Noted					Revised:	Designer: JHK / Structure Numbers C-17-FX	23019
Unit Information	Unit Leader Initials				Region 4 ALG	Void:	Detailer: JHK / C-17-FXA; Sheet Subset: IRRIGATION; Subset Sheets: of	Sheet Number IR1.16

RFC SUBMITTAL - NOT FOR CONSTRUCTION - OCTOBER 25, 2021

Section	ITEM #	DESCRIPTION	UNIT	QTY.
619	619-50120	1.5-Inch PVC Mainline	LF	3,345
619	619-50160	2-Inch PVC Mainline	LF	2,000
619	619-50100	1-1/4-Inch PVC Lateral Pipe	LF	300
619	619-50080	1-Inch PVC Lateral Pipe	LF	7,300
619	619	Sleeving	LS	1
623	623	Winterization Assembly	EA	2
623	623	Backflow Prevention Assembly	EA	2
623	623	Master Valve Assembly	EA	2
623	623	Flow Sensor Assembly	EA	2
623	623	Blow Out Assembly	EA	2
623	623	Isolation Gate Valve	EA	14
623	623	Quick Coupling Valve	EA	11
623	623	Remote Control Valve	EA	38
623	623	Drip Remote Control Valve	EA	5
623	623	Pop-Up Bubbler Assembly	EA	8
623	623	Pop-Up Spray Sprinkler Assembly	EA	153
623	623	Pop-Up Rotor Sprinkler Assembly	EA	173
623	623	Irrigation Controller Assembly	EA	2
623	623	Irrigation Controller Grounding	EA	2
613	613-10010	Irrigation Wiring	LS	1

NOTE:

1. This quantity estimate is not intended for use in bidding or ordering of equipment. Aqua Engineering will not be responsible for differences between this information and actual project equipment quantities or design/construction costs.

Aqua Engineering Inc.
Innovative Water Solutions
375 E. Horsetooth Road, Building 2-202
Fort Collins, CO 80525-3196
970.229.9668
www.aquaengineering.com

Print Date:
Drawing File Name:
Horiz. Scale: Vert. Scale: As Noted
Unit Information Unit Leader Initials

Sheet Revisions		
Date:	Comments	Init.

Colorado Department of Transportation
1050 Lee Hill Road
Boulder, CO 80302
Phone: 303-546-5676
FAX: 303-444-0751
Region 4 ALG

As Constructed
No Revisions:
Revised:
Void:

I-25 EXPR. LANES SEG 5&6 CP5
URBAN DESIGN ELEMENTS
IRRIGATION QUANTITY LIST

Designer: JHK
Detailer: JHK
Sheet Subset: IRRIGATION
Structure Numbers C-17-FX C-17-FXA
Subset Sheets: of

Project No./Code
NHPP 0253-275
23019
Sheet Number IR1.27

RFC SUBMITTAL - NOT FOR CONSTRUCTION - OCTOBER 25, 2021

MATCHLINE SEE SHEET IR2.3

EXISTING ROW

EXISTING EASEMENT

PROPOSED UTILITY EASEMENT

BK NNN PROPERTIES
PARCEL ID:
REC. NO. 4112636-6/20/2016

PROPOSED UTILITY EASEMENT

WARNING! SEVERAL UTILITIES TO CROSS

IRRIGATION CONTROLLER
*REQUIRES 120 VAC POWER
*11 STATIONS USED

GATEWAY DR

HWY. 60

HWY. 60

1, 4-INCH SLEEVE
1, 3-INCH SLEEVE

2, 3-INCH SLEEVES

2, 3-INCH SLEEVES

2, 3-INCH SLEEVES

2, 3-INCH SLEEVES

2, 3-INCH SLEEVES

IRRIGATION DITCH EASEMENT (BK.1570, PG.[illegible])

A-1	12	1"	-		
A-2	16	1"	-		
A-3	10	1"	-		
A-4	0.75	1"	-		
A-5		1"	-		
A-6		1"	-		
A-7	14	1"	-		
A-8	9	1"	-		
A-9	19	1"	-		
A-10	11	1"	-		
A-11	15	1"	-		
A-12	22	1"	-		
A-13		1"	-		
A-14	20	1"	-		
A-15	9	1"	-		
A-16	19	1"	-		
A-17	7	1"	-		

MATCHLINE SEE SHEET IR2.1

60' 0' 30' 60' 120'
1" = 60'
SCALE MUST MEASURE 1 INCH OR DRAWING IS NOT TO SCALE.

N W E S

Aqua Engineering Inc.
Innovative Water Solutions
375 E. Horsetooth Road, Building 2-202
Fort Collins, CO 80525-3196
970.229.9668
www.aquaengineering.com

Print Date:		Sheet Revisions			
Drawing File Name:		Date:	Comments	Init.	
Horiz. Scale:	Vert. Scale: As Noted				
Unit Information	Unit Leader Initials				

Colorado Department of Transportation
1050 Lee Hill Road
Boulder, CO 80302
Phone: 303-546-5676
FAX: 303-444-0751
Region 4 ALG

As Constructed
No Revisions:
Revised:
Void:

I-25 EXPR. LANES SEG 5&6 CP5
URBAN DESIGN ELEMENTS
IRRIGATION PLAN

Designer: JHK
Detailer: JHK
Sheet Subset: IRRIGATION
Structure Numbers: C-17-FX, C-17-FXA
Subset Sheets: of

Project No./Code
NHPP 0253-275
23019
Sheet Number IR2.07

$PENTBLS$
$PLTDRVS$
$PLOT_INFO$
$DATE$

RFC SUBMITTAL - NOT FOR CONSTRUCTION - OCTOBER 25, 2021

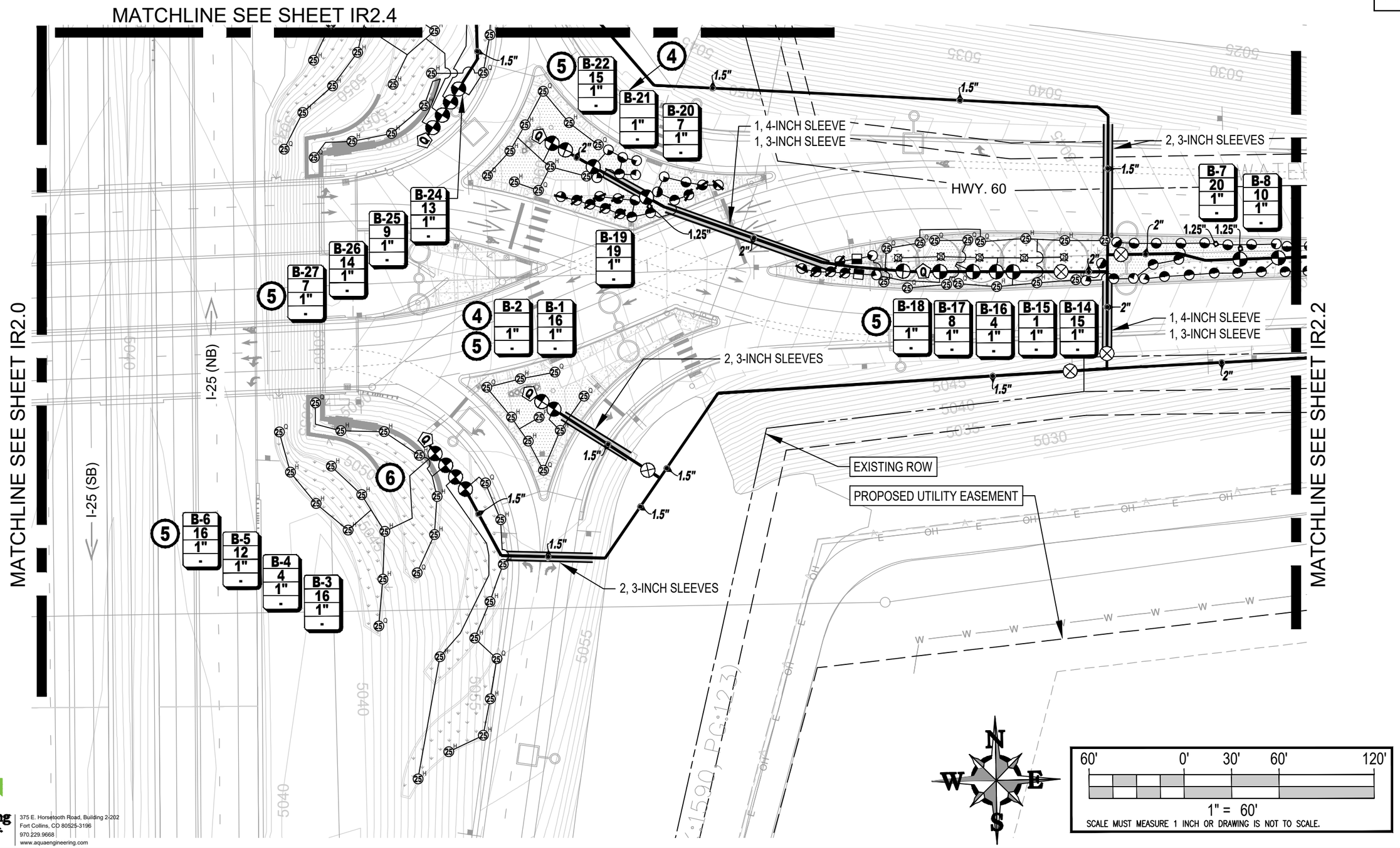

Aqua Engineering Inc.
Innovative Water Solutions
375 E. Horsetooth Road, Building 2-202
Fort Collins, CO 80525-3196
970.229.9668
www.aquaengineering.com

Print Date:		Sheet Revisions	
Drawing File Name:		Date: / Comments / Init.	
Horiz. Scale:	Vert. Scale: As Noted		
Unit Information	Unit Leader Initials		

Colorado Department of Transportation
1050 Lee Hill Road
Boulder, CO 80302
Phone: 303-546-5676
FAX: 303-444-0751
Region 4 ALG

As Constructed
No Revisions:
Revised:
Void:

I-25 EXPR. LANES SEG 5&6 CP5
URBAN DESIGN ELEMENTS
IRRIGATION PLAN

Designer:	JHK	Structure Numbers	C-17-FX
Detailer:	JHK		C-17-FXA
Sheet Subset:	IRRIGATION	Subset Sheets:	of

Project No./Code
NHPP 0253-275
23019
Sheet Number IR2.17

RFC SUBMITTAL - NOT FOR CONSTRUCTION - OCTOBER 25, 2021

$PENTBL$
$PLTDRVS$
$PLOT_INFO$
$DATE$

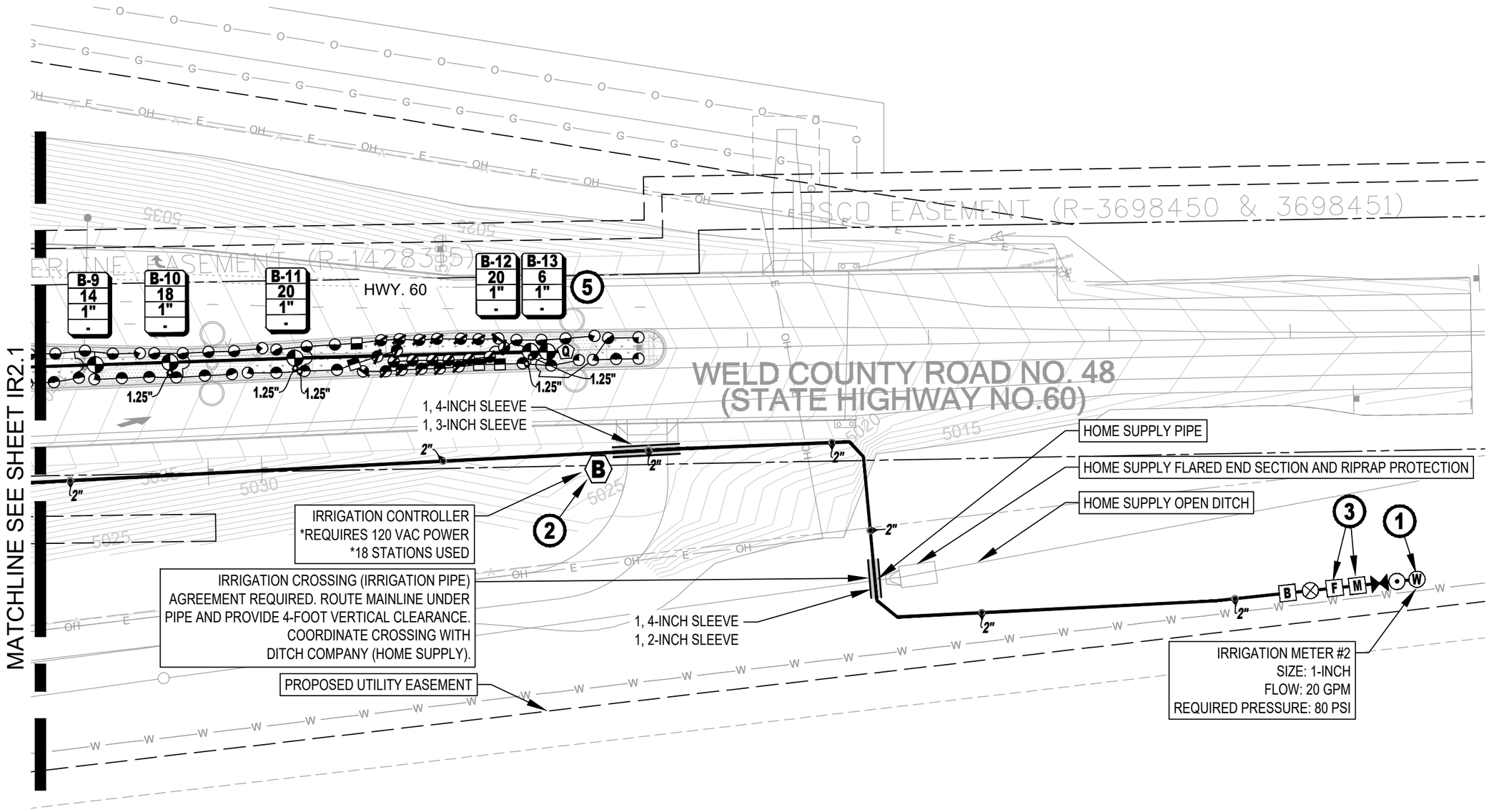

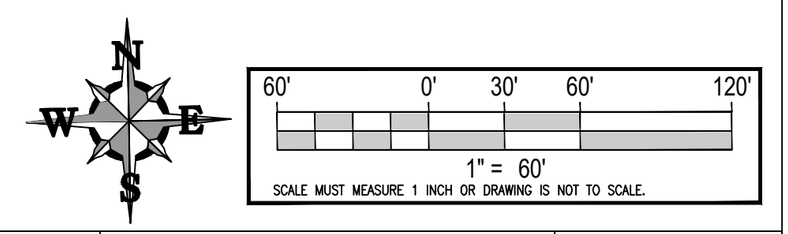

Aqua Engineering Inc.
Innovative Water Solutions
375 E. Horsetooth Road, Building 2-202
Fort Collins, CO 80525-3196
970.229.9668
www.aquaengineering.com

Print Date:	Sheet Revisions	Colorado Department of Transportation	As Constructed	I-25 EXPR. LANES SEG 5&6 CP5 URBAN DESIGN ELEMENTS IRRIGATION PLAN
Drawing File Name:	Date: / Comments / Init.	1050 Lee Hill Road, Boulder, CO 80302, Phone: 303-546-5676, FAX: 303-444-0751	No Revisions:	Designer: JHK — Structure Numbers: C-17-FX
Horiz. Scale: / Vert. Scale: As Noted		Region 4 — ALG	Revised:	Detailer: JHK — C-17-FXA
Unit Information / Unit Leader Initials			Void:	Sheet Subset: IRRIGATION — Subset Sheets: of

Project No./Code: NHPP 0253-275
23019
Sheet Number IR2.27

$PENTBL$S
$PLTDRVS$
$PLOT_INFO$
$DATE$

RFC SUBMITTAL - NOT FOR CONSTRUCTION - OCTOBER 25, 2021

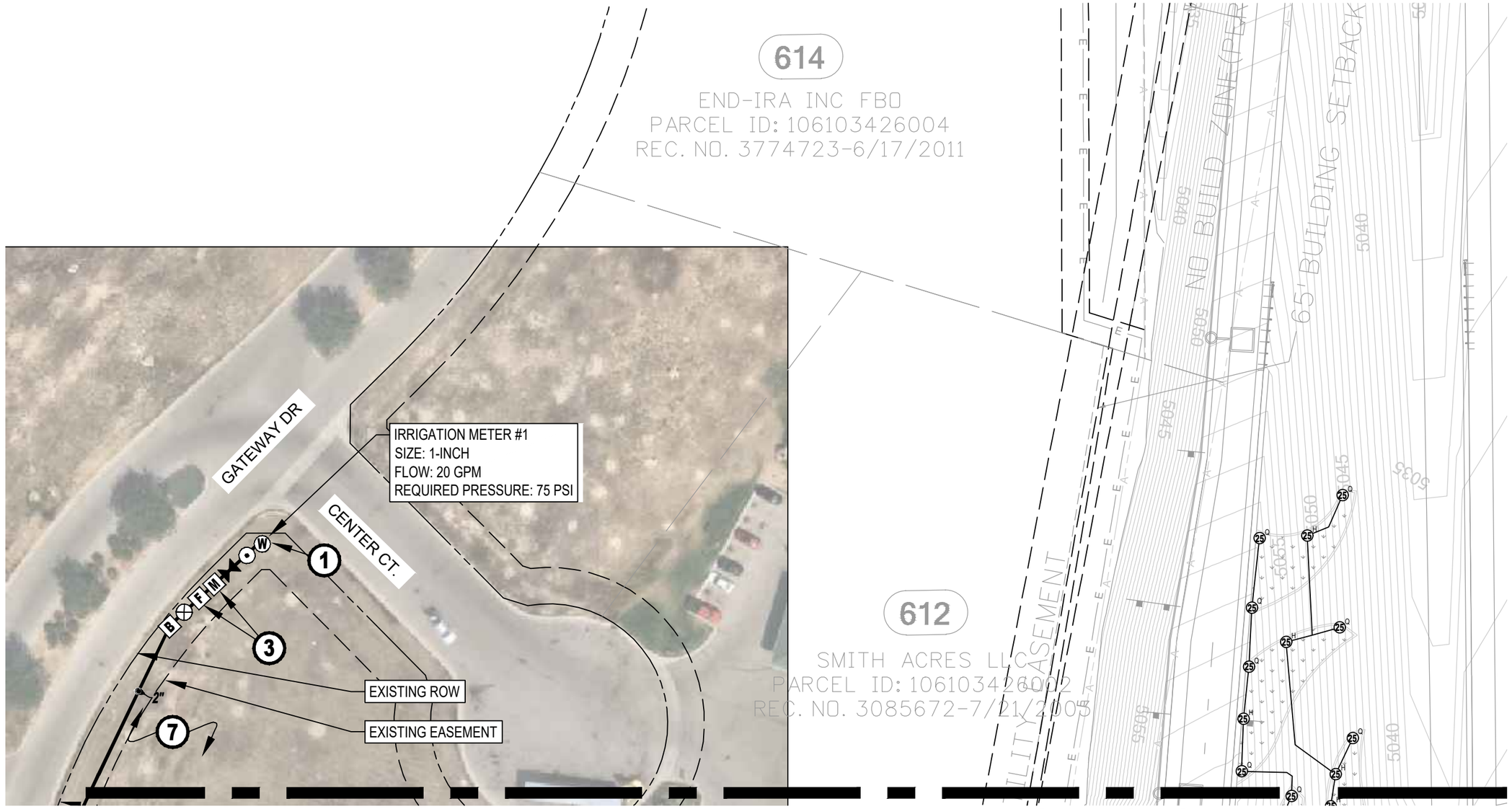

MATCHLINE SEE SHEET IR2.0

N
W E
S

60' 0' 30' 60' 120'

1" = 60'

SCALE MUST MEASURE 1 INCH OR DRAWING IS NOT TO SCALE.

Aqua Engineering Inc.
Innovative Water Solutions
375 E. Horsetooth Road, Building 2-202
Fort Collins, CO 80525-3196
970.229.9668
www.aquaengineering.com

Print Date:		Sheet Revisions			Colorado Department of Transportation	As Constructed	I-25 EXPR. LANES SEG 5&6 CP5 URBAN DESIGN ELEMENTS IRRIGATION PLAN	Project No./Code
Drawing File Name:		Date:	Comments	Init.	1050 Lee Hill Road Boulder, CO 80302 Phone: 303-546-5676 FAX: 303-444-0751	No Revisions:		NHPP 0253-275
Horiz. Scale:	Vert. Scale: As Noted					Revised:	Designer: JHK / Structure Numbers C-17-FX	23019
Unit Information	Unit Leader Initials						Detailer: JHK / C-17-FXA	
					Region 4 ALG	Void:	Sheet Subset: IRRIGATION / Subset Sheets: of	Sheet Number IR2.37

$PENTBLS$
$PLTDRVS$
$PLOT_INFO$
$DATE$

RFC SUBMITTAL - NOT FOR CONSTRUCTION - OCTOBER 25, 2021

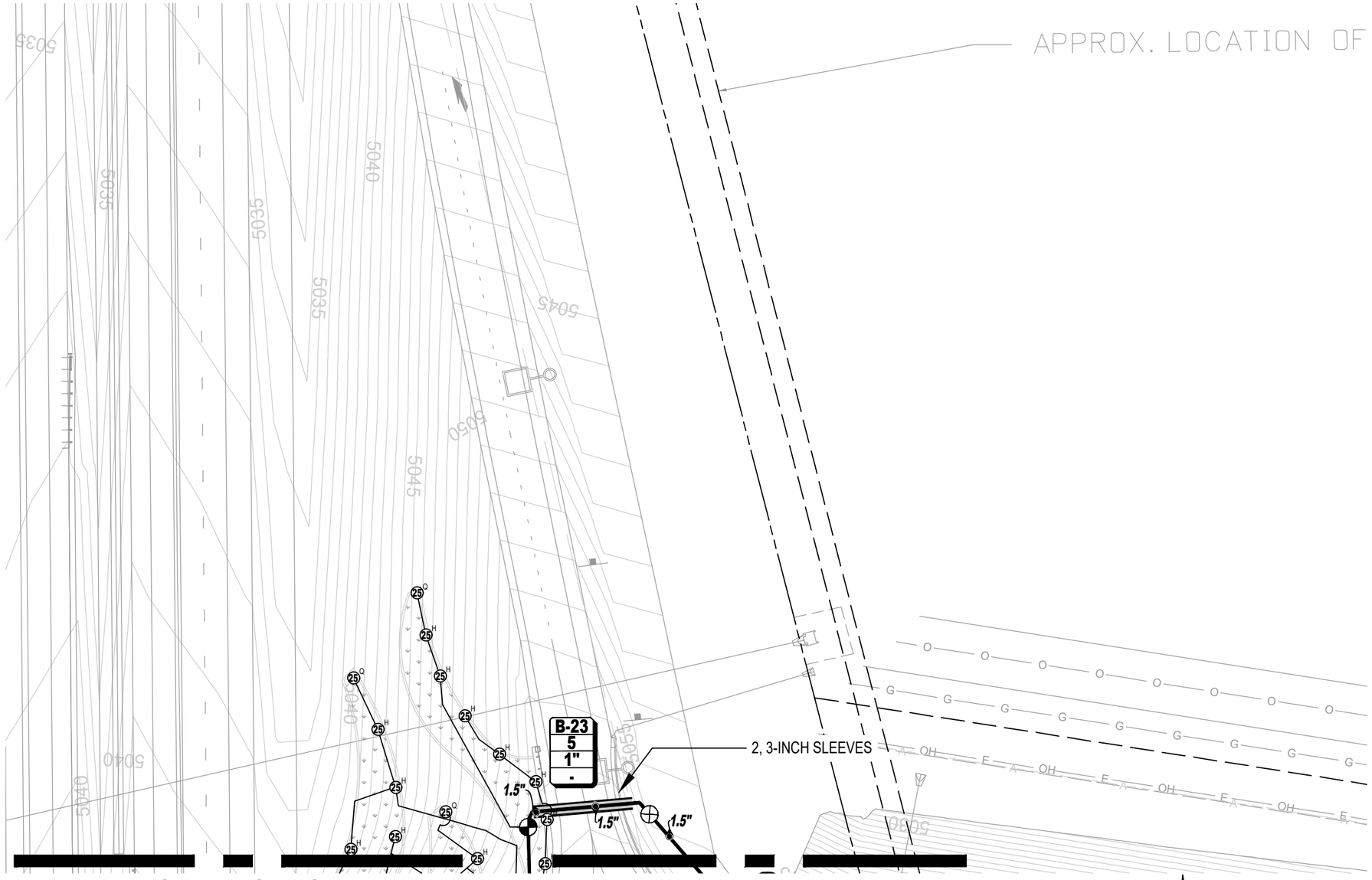

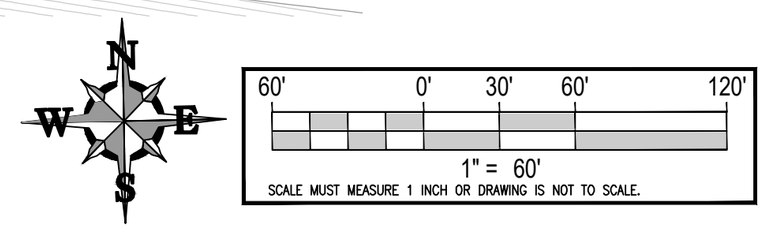

Aqua Engineering Inc.
Innovative Water Solutions
375 E. Horsetooth Road, Building 2-202
Fort Collins, CO 80525-3196
970.229.9668
www.aquaengineering.com

Print Date:	Sheet Revisions			Colorado Department of Transportation	As Constructed
Drawing File Name:	Date:	Comments	Init.	1050 Lee Hill Road Boulder, CO 80302 Phone: 303-546-5676 FAX: 303-444-0751	No Revisions:
Horiz. Scale: Vert. Scale: As Noted					Revised:
Unit Information Unit Leader Initials				Region 4 ALG	Void:

I-25 EXPR. LANES SEG 5&6 CP5 URBAN DESIGN ELEMENTS IRRIGATION PLAN			Project No./Code
			NHPP 0253-275
Designer: JHK	Structure Numbers	C-17-FX	23019
Detailer: JHK		C-17-FXA	
Sheet Subset: IRRIGATION	Subset Sheets:	of	Sheet Number IR2.47

$PENTBL$
$PLTDRV$
$PLOT_INFO$
$DATE$

RFC SUBMITTAL - NOT FOR CONSTRUCTION - OCTOBER 25, 2021

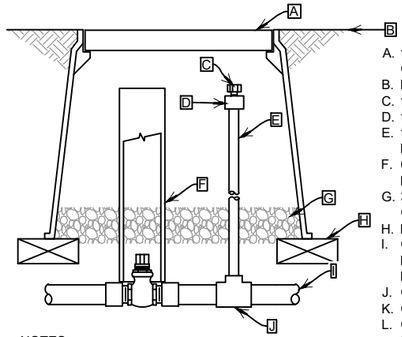

A. 12" STANDARD VALVE BOX WITH COVER
B. FINISH GRADE/TOP OF MULCH
C. 1/4" THREADED BRASS CAP
D. 1/2" REDUCING MALE ADAPTER
E. 1/2" COPPER PIPE (LENGTH AS REQUIRED)
F. 6" PVC CL 200 PIPE (LENGTH AS REQUIRED)
G. 3" MINIMUM DEPTH OF 3/4" WASHED GRAVEL
H. BRICK (1 OF 4)
I. COPPER PIPE TO BACKFLOW PREVENTION ASSEMBLY (LENGTH AS REQUIRED)
J. COPPER TEE
K. COPPER MALE ADAPTER (1 OF 2)
L. CURB STOP VALVE WITH COPPER SERVICE, THREAD BOTH ENDS
M. COPPER PIPE TO EXISTING COPPER PIPE OUTSIDE EXISTING WATER METER

NOTES:
1. FURNISH NOMINAL PIPE AND FITTING SIZES IDENTICAL WITH NOMINAL TAP SIZE UNLESS OTHERWISE NOTED.
2. THIS ASSEMBLY IS INTENDED TO BE USED FOR WINTERIZATION OF BACKFLOW PREVENTER, MASTER VALVE, AND FLOW SENSOR.

1 WINTERIZATION ASSEMBLY

N.T.S.

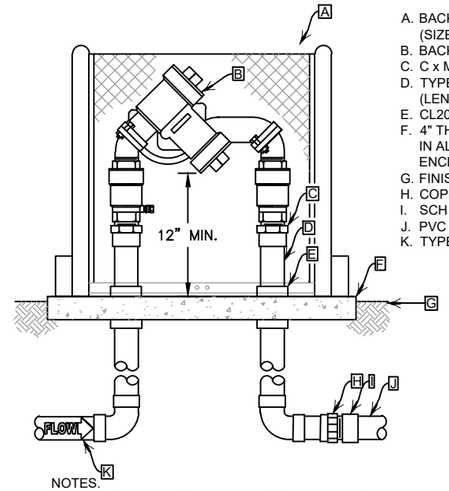

A. BACKFLOW PREVENTER ENCLOSURE (SIZE AS NECESSARY)
B. BACKFLOW PREVENTION DEVICE
C. C x M COPPER ADAPTER (1 OF 2)
D. TYPE K COPPER PIPE (TYPICAL) (LENGTH AS REQUIRED)
E. CL200 PVC PIPE SLEEVE (1 OF 2)
F. 4" THICK CONCRETE PAD 6" LARGER IN ALL DIMENSIONS THAN ENCLOSURE
G. FINISH GRADE/TOP OF MULCH
H. COPPER FEMALE ADAPTER
I. SCH 40 PVC MALE ADAPTER
J. PVC MAINLINE
K. TYPE K COPPER PIPE

NOTES.
1. FURNISH FITTINGS AND PIPING SIZED IDENTICALLY WITH NOMINAL BACKFLOW PREVENTION DEVICE.
2. SUBMIT SHOP DRAWINGS SPECIFYING ENCLOSURE SIZE AND SHOWING RELATIVE LAYOUT OF EQUIPMENT.

2 BACKFLOW PREVENTION ASSEMBLY

N.T.S.

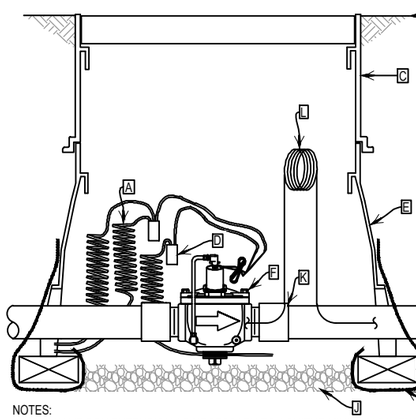

A. 30" LENGTH OF COILED WIRE
B. FINISH GRADE
C. VALVE BOX EXTENSION (HEIGHT AS REQUIRED)
D. WATER PROOF CONNECTION (1 OF 2)
E. 12" STANDARD VALVE BOX WITH COVER
F. SOLENOID VALVE
G. PVC PIPE
H. BRICK (1 OF 4)
I. FILTER FABRIC
J. 3" MINIMUM DEPTH OF 3/4" WASHED GRAVEL
K. PVC SCH 40 MALE ADAPTER
L. TRACING WIRE

NOTES:
1. USE VALVE BOX EXTENSION AS NECESSARY TO ACHIEVE MINIMUM DIMENSIONS ABOVE ASSEMBLY.
2. NOMINAL SIZE OF ALL COMPONENTS ARE TO BE THE SAME NOMINAL SIZE AS THE SOLENOID VALVE (SIZED AS SHOWN).
3. INSTALL FILTER FABRIC AROUND EXTERIOR OF VALVE BOX. USE DUCT TAPE TO SECURE FABRIC TO PIPE AND VALVE BOX.
4. DO NOT CUT OUT ENDS OF VALVE BOX UNNECESSARILY.
5. POSITION VALVE BOX OVER VALVE TO ALLOW ACCESS TO SOLENOID.
6. INSTALL SO THAT GRAVEL IS ONLY IN CONTACT WITH BOTTOM OF VALVE ASSEMBLY.

3 MASTER VALVE ASSEMBLY

M

N.T.S.

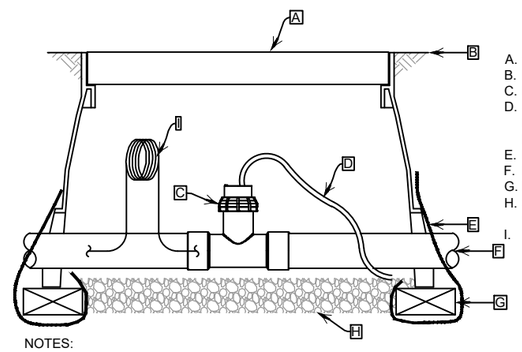

A. 12" VALVE BOX WITH COVER
B. FINISH GRADE/TOP OF MULCH
C. FLOW SENSOR
D. SENSOR CABLE PER MANUFACTURER'S RECOMMENDATIONS
E. FILTER FABRIC
F. PVC PIPE
G. BRICK (1 OF 4)
H. 3" MINIMUM DEPTH OF 3/4" WASHED GRAVEL
I. TRACING WIRE

NOTES:
1. ALLOW 10 PIPE DIAMETERS UPSTREAM AND 5 PIPE DIAMETERS DOWNSTREAM OF STRAIGHT RUN OF PIPE TO ACHIEVE PROPER FLOW REGIME.
2. INSTALL FILTER FABRIC AROUND EXTERIOR OF VALVE BOX. USE DUCT TAPE TO SECURE FABRIC TO PIPE AND VALVE BOX.
3. DO NOT CUT OUT ENDS OF VALVE BOX UNNECESSARILY.
4. INSTALL SO THAT GRAVEL IS ONLY IN CONTACT WITH BOTTOM OF SENSOR ASSEMBLY.

4 FLOW SENSOR ASSEMBLY

F

N.T.S.

$PENTBL$$

Aqua Engineering Inc.
Innovative Water Solutions
375 E. Horsetooth Road, Building 2-202
Fort Collins, CO 80525-3196
970.229.9668
www.aquaengineering.com

$PLTDRVS$

$PLOT_INFO$
$DATE$

Print Date:		Sheet Revisions			Colorado Department of Transportation	As Constructed	I-25 EXPR. LANES SEG 5&6 CP5 URBAN DESIGN ELEMENTS IRRIGATION DETAILS	Project No./Code
Drawing File Name:		Date:	Comments	Init.	1050 Lee Hill Road Boulder, CO 80302 Phone: 303-546-5676 FAX: 303-444-0751	No Revisions:		NHPP 0253-275
Horiz. Scale:	Vert. Scale: As Noted					Revised:	Designer: JHK / Structure Numbers C-17-FX	23019
Unit Information	Unit Leader Initials						Detailer: JHK / C-17-FXA	
					Region 4 ALG	Void:	Sheet Subset: IRRIGATION / Subset Sheets: of	Sheet Number IR3.07

RFC SUBMITTAL - NOT FOR CONSTRUCTION - OCTOBER 25, 2021

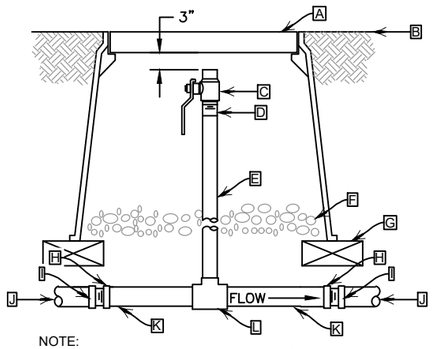

A. 12" STANDARD VALVE BOX WITH COVER
B. FINISH GRADE/TOP OF MULCH
C. 1" BRONZE BALL VALVE FEMALE THREADED ENDS
D. 1" COPPER MALE ADAPTER
E. 1" COPPER PIPE (LENGTH AS REQUIRED)
F. 3" MIN. DEPTH OF 3/4" WASHED GRAVEL
G. BRICK (1 OF 4)
H. COPPER FEMALE THREADED ADAPTER
I. SCH. 40 PVC MALE THREADED ADAPTER
J. PVC MAINLINE
K. COPPER PIPE
L. COPPER TEE

NOTE:
1. FURNISH NOMINAL PIPE AND FITTING SIZES IDENTICAL WITH NOMINAL TAP SIZE UNLESS OTHERWISE NOTED.

1 BLOW OUT ASSEMBLY

B

N.T.S.

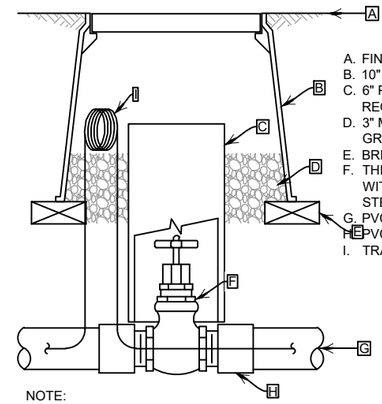

A. FINISH GRADE/TOP OF MULCH
B. 10" ROUND VALVE BOX WITH COVER
C. 6" PVC CL 200 PIPE (LENGTH AS REQUIRED)
D. 3" MINIMUM DEPTH OF 3/4" WASHED GRAVEL
E. BRICK (1 OF 2)
F. THREADED BRONZE GATE VALVE WITH SOLID WEDGE, NON-RISING STEM
G. PVC MAINLINE
H. PVC SCH 40 MALE ADAPTER (1 OF 2)
I. TRACING WIRE

NOTE:
1. NOMINAL SIZE OF GATE VALVE TO MATCH NOMINAL MAINLINE SIZE.

2 ISOLATION GATE VALVE ASSEMBLY

N.T.S.

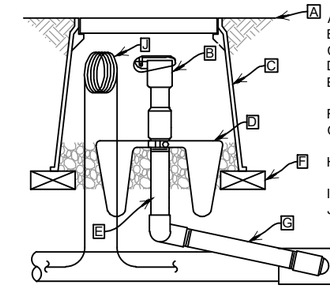

A. FINISH GRADE/TOP OF MULCH
B. QUICK-COUPLING VALVE
C. 10" ROUND VALVE BOX WITH COVER
D. HARCO QUICK COUPLER ANCHOR
E. PVC SCH 80 TOE NIPPLE (LENGTH AS REQUIRED)
F. BRICK (1 OF 2)
G. PRE-FABRICATED UNITIZED SWING JOINT 1" MIPT INLET X SOC OUTLET
H. TEE OR EL: SEE SPECIFICATIONS FOR MATERIALS
I. PVC MAINLINE PIPE
J. TRACING WIRE

NOTES:
1. FURNISH FITTINGS AND PIPING NOMINALLY SIZED IDENTICAL TO NOMINAL QUICK COUPLING VALVE INLET SIZE.
2. INSTALLATION HEIGHT OF QUICK COUPLER VALVE IN VALVE BOX MUST ALLOW PROPER OPERATION OF QUICK COUPLER KEY.
3. INSTALL SWING JOINT LAY ARM BETWEEN 30° AND 45° OF LATERAL PIPE IN ORDER TO ABSORB DOWNWARD IMPACT.

3 QUICK COUPLING VALVE ASSEMBLY

Q

N.T.S.

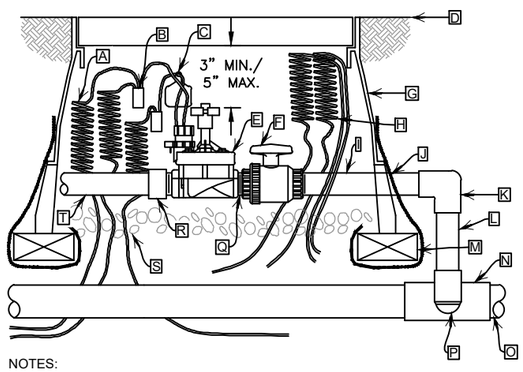

A. 30" LENGTH OF COILED WIRE
B. WATERPROOF CONNECTION (1 OF 2)
C. CHRISTY ID TAG
D. FINISH GRADE
E. REMOTE CONTROL VALVE (SIZED AS SHOWN ON DRAWINGS)
F. PVC BALL VALVE: SPEARS PVC COMPACT
G. 12" STANDARD VALVE BOX WITH COVER
H. SPARE WIRE
I. PVC SCH 80 TOE NIPPLE (LENGTH AS REQUIRED)
J. FILTER FABRIC
K. PVC SCH 40 EL
L. PVC SCH 40 PIPE (LENGTH AS REQUIRED)
M. BRICK (1 OF 4)
N. TEE OR EL: SEE SPECIFICATIONS FOR MATERIALS
O. PVC MAINLINE
P. PVC SCH 80 TOE NIPPLE (LENGTH AS REQUIRED, HIDDEN) AND PVC SCH 40 EL
Q. PVC SCH 80 CLOSE NIPPLE
R. PVC SCH 40 MALE ADAPTER
S. 3" MINIMUM DEPTH OF 3/4" WASHED GRAVEL
T. PVC LATERAL PIPE

NOTES:
1. USE VALVE BOX EXTENSION AS NECESSARY TO ACHIEVE MINIMUM DIMENSIONS ABOVE ASSEMBLY.
2. NOMINAL SIZE OF ALL COMPONENTS ARE TO BE THE SAME NOMINAL SIZE AS THE SOLENOID VALVE (SIZED AS SHOWN).
3. INSTALL FILTER FABRIC AROUND EXTERIOR OF VALVE BOX. USE DUCT TAPE TO SECURE FABRIC TO PIPE AND VALVE BOX.
4. TRANSITION TO PROPER LATERAL PIPE BURIAL DEPTH USING 45° ELBOW FITTINGS DOWNSTREAM OF REMOTE CONTROL VALVE ASSEMBLY.
5. DO NOT CUT OUT ENDS OF VALVE BOX UNNECESSARILY.
6. POSITION VALVE BOX OVER VALVE TO ALLOW ACCESS TO SOLENOID AND PROPER OPERATION OF BALL VALVE.

4 REMOTE CONTROL VALVE ASSEMBLY

N.T.S.

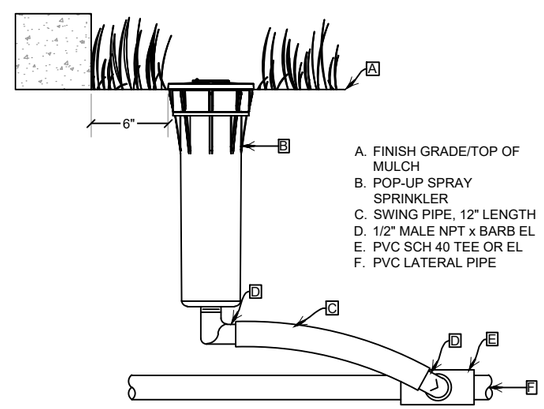

A. FINISH GRADE/TOP OF MULCH
B. POP-UP SPRAY SPRINKLER
C. SWING PIPE, 12" LENGTH
D. 1/2" MALE NPT x BARB EL
E. PVC SCH 40 TEE OR EL
F. PVC LATERAL PIPE

5 POP-UP SPRAY SPRINKLER ASSEMBLY

N.T.S.

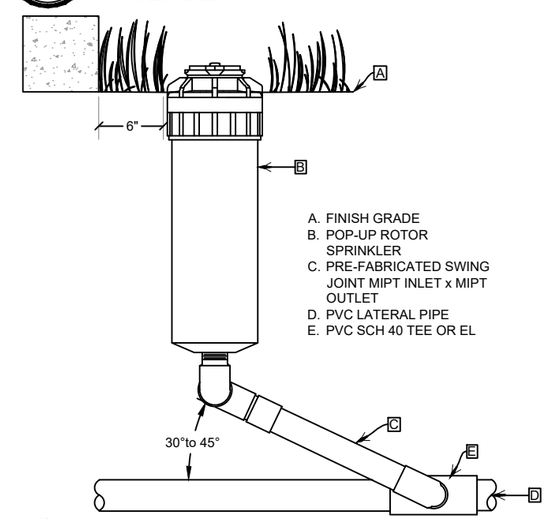

A. FINISH GRADE
B. POP-UP ROTOR SPRINKLER
C. PRE-FABRICATED SWING JOINT MIPT INLET x MIPT OUTLET
D. PVC LATERAL PIPE
E. PVC SCH 40 TEE OR EL

6 POP-UP ROTOR SPRINKLER ASSEMBLY

N.T.S.

Aqua Engineering Inc.
Innovative Water Solutions
375 E. Horsetooth Road, Building 2-202
Fort Collins, CO 80525-3196
970.229.9668
www.aquaengineering.com

Print Date:	Sheet Revisions	Date:	Comments	Init.	
Drawing File Name:					
Horiz. Scale: Vert. Scale: As Noted					
Unit Information Unit Leader Initials					

Colorado Department of Transportation
1050 Lee Hill Road
Boulder, CO 80302
Phone: 303-546-5676
FAX: 303-444-0751
Region 4 ALG

As Constructed
No Revisions:
Revised:
Void:

I-25 EXPR. LANES SEG 5&6 CP5
URBAN DESIGN ELEMENTS
IRRIGATION DETAILS

Designer: JHK
Detailer: JHK
Structure Numbers: C-17-FX, C-17-FXA
Sheet Subset: IRRIGATION
Subset Sheets: of

Project No./Code
NHPP 0253-275
23019
Sheet Number IR3.17

$PENTBL$
$PLTDRVS$
$PLOT_INFO$
$DATE$

RFC SUBMITTAL - NOT FOR CONSTRUCTION - OCTOBER 25, 2021

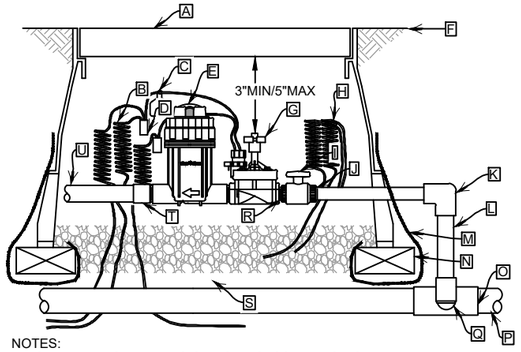

A. JUMBO VALVE BOX WITH COVER
B. 30" LENGTH OF COILED WIRE
C. CHRISTY ID TAG
D. WATERPROOF CONNECTION (1 OF 2)
E. FILTER/PRESSURE REGULATOR
F. FINISH GRADE/TOP OF MULCH
G. REMOTE CONTROL VALVE
H. SPARE WIRE
I. PVC BALL VALVE
J. PVC SCH 80 TOE NIPPLE (LENGTH AS REQUIRED)
K. PVC SCH 40 EL
L. PVC SCH 40 PIPE (LENGTH AS REQUIRED)
M. FILTER FABRIC
N. BRICK (1 OF 4)
O. TEE OR EL: SEE SPECIFICATIONS FOR MATERIALS
P. PVC MAINLINE
Q. PVC SCH 80 TOE NIPPLE (LENGTH AS REQUIRED, HIDDEN) AND PVC SCH 40 EL
R. PVC SCH 80 CLOSE NIPPLE
S. 3" MINIMUM DEPTH OF WASHED PEA GRAVEL
T. PVC SCH 40 BARB ADAPTER (FPT X BARB)
U. DRIP LATERAL PIPE - SECURE TO ITEM T WITH STAINLESS STEEL PINCH CLAMPS

NOTES:
1. USE VALVE BOX EXTENSION AS NECESSARY TO ACHIEVE MINIMUM DIMENSIONS ABOVE ASSEMBLY.
2. NOMINAL SIZE OF ALL COMPONENTS ARE TO BE THE SAME NOMINAL SIZE AS THE SOLENOID VALVE (SIZED AS SHOWN).
3. INSTALL FILTER FABRIC AROUND EXTERIOR OF VALVE BOX. USE DUCT TAPE TO SECURE FABRIC TO PIPE AND VALVE BOX.
4. TRANSITION TO PROPER LATERAL PIPE BURIAL DEPTH USING 45° ELBOW FITTINGS DOWNSTREAM OF REMOTE CONTROL VALVE ASSEMBLY.
5. DO NOT CUT OUT ENDS OF VALVE BOX UNNECESSARILY.
6. POSITION VALVE BOX OVER VALVE TO ALLOW ACCESS TO SOLENOID AND PROPER OPERATION OF BALL VALVE.

1 DRIP REMOTE CONTROL VALVE ASSEMBLY

N.T.S.

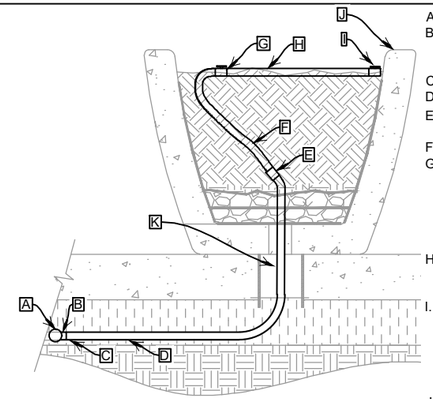

A. PVC LATERAL PIPE
B. SCH. 40 PVC TEE OR EL (SERVICE OUTLET). INSTALL NECESSARY BUSHING.
C. SCH. 40 PVC BARB (FPT X BARB)
D. 3/4-INCH 160 PSI POLYETHYLENE
E. SCH. 40 PVC $\frac{3}{4}$" X $\frac{3}{4}$" COUPLING AND NECESSARY BARBED CONNECTIONS.
F. 1/2-INCH POLYETHYLENE
G. 1/2-INCH SCH. 40 PVC BALL VALVE (FOR ISOLATION). INSTALL NECESSARY SCH. 40 PVC BARB FITTINGS AND STAINLESS STEEL PINCH CLAMPS. INTENDED AS ISOLATION VALVE.
H. INLINE DRIP TUBING (RAIN BIRD XFCV-06-12) COILED IN POT AS NEEDED
I. TERMINATE END OF INLINE DRIP TUBING WITH 1/2-INCH SCH. 40 PVC BALL VALVE AND NECESSARY SCH. 40 PVC BARB FITTINGS AND STAINLESS STEEL PINCH CLAMP (INTENDED AS FLUSHING VALVE)
J. PLANTER POT (RE:LANDSCAPE)
K. CONTRACTOR TO COORDINATE PENETRATIONS AS REQUIRED IN THE FIELD

2 PLANTER POT IRRIGATION DETAIL

N.T.S.

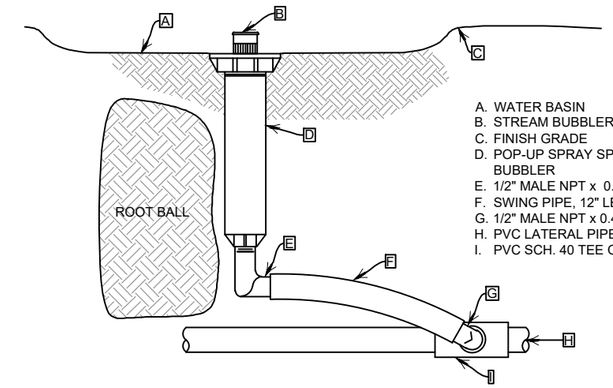

A. WATER BASIN
B. STREAM BUBBLER
C. FINISH GRADE
D. POP-UP SPRAY SPRINKLER W/ BUBBLER
E. 1/2" MALE NPT x 0.490" BARB EL
F. SWING PIPE, 12" LENGTH
G. 1/2" MALE NPT x 0.49" BARB EL
H. PVC LATERAL PIPE
I. PVC SCH. 40 TEE OR EL

3 POP-UP BUBBLER ASSEMBLY

N.T.S.

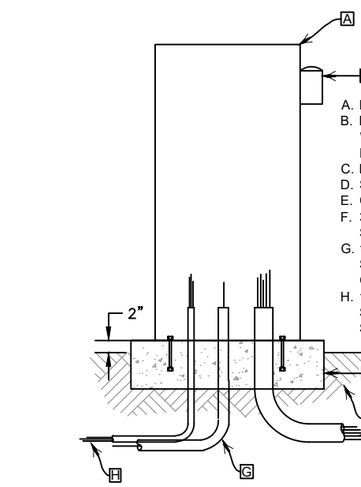

A. IRRIGATION CONTROLLER ASSEMBLY
B. RAIN SENSOR (HUNTER MINI-CLIK) WITH STRONGBOX VANDAL GUARD MOUNTED TO SIDE OF PEDESTAL
C. FINISH GRADE
D. STRONG BOX QUICK PAD
E. COMPACTED SUBGRADE
F. 3" SCH 40 ELECTRICAL CONDUIT AND SWEEP EL FOR CONTROLLER WIRES
G. 1" SCH 40 ELECTRICAL CONDUIT AND SWEEP EL FOR ELECTRICAL GROUNDING
H. 1" SCH 40 ELECTRICAL CONDUIT AND SWEEP EL FOR ELECTRICAL SERVICE

4 IRRIGATION CONTROLLER ASSEMBLY

N.T.S.

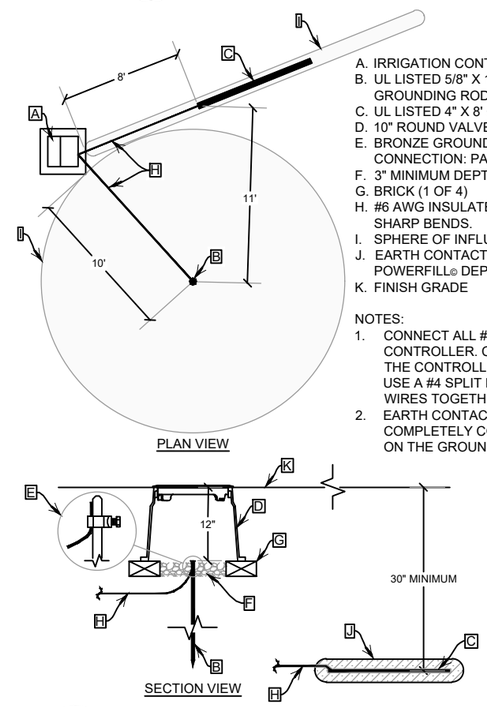

A. IRRIGATION CONTROLLER ASSEMBLY
B. UL LISTED 5/8" X 10' COPPER-CLAD GROUNDING ROD
C. UL LISTED 4" X 8' COPPER GROUNDING PLATE
D. 10" ROUND VALVE BOX WITH COVER
E. BRONZE GROUND ROD CLAMP OR CADWELD CONNECTION: PAIGE ELECTRIC
F. 3" MINIMUM DEPTH OF 3/4" WASHED GRAVEL
G. BRICK (1 OF 4)
H. #6 AWG INSULATED SOLID COPPER WIRE. NO SHARP BENDS.
I. SPHERE OF INFLUENCE
J. EARTH CONTACT MATERIAL, POWERSET® OR POWERFILL® DEPENDING ON SOIL CONDITIONS
K. FINISH GRADE

NOTES:
1. CONNECT ALL #6 AWG WIRES INSIDE THE CONTROLLER. CONNECT ONE WIRE TO THE CONTROLLER GROUND LUG AND USE A #4 SPLIT BOLT TO CONNECT ALL WIRES TOGETHER.
2. EARTH CONTACT MATERIAL MUST COMPLETELY COVER THE WELD JOINT ON THE GROUND PLATE.

5 IRRIGATION CONTROLLER GROUNDING DETAIL

N.T.S.

1. STRIP ENDS OF WIRE
2. SECURE WIRES INTO WIRE NUT
3. INSERT WIRE NUT INTO GEL-FILLED TUBE
4. POSITION WIRES INTO CHANNELS
5. CLOSE SPLICE KIT FOR SECURED SEAL

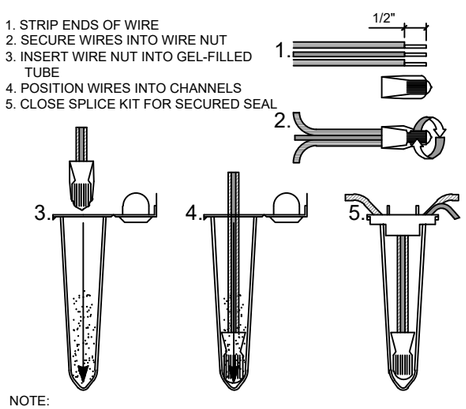

NOTE:
1. VISUALLY CHECK THAT CONNECTOR IS BELOW LOCKING "FINGERS".

6 WIRE SPLICE DETAIL

N.T.S.

Aqua Engineering Inc.
Innovative Water Solutions
375 E. Horsetooth Road, Building 2-202
Fort Collins, CO 80525-3196
970.229.9668
www.aquaengineering.com

Print Date:		Sheet Revisions			Colorado Department of Transportation	As Constructed	I-25 EXPR. LANES SEG 5&6 CP5 URBAN DESIGN ELEMENTS IRRIGATION DETAILS	Project No./Code
Drawing File Name:		Date:	Comments	Init.	1050 Lee Hill Road Boulder, CO 80302 Phone: 303-546-5676 FAX: 303-444-0751	No Revisions:		NHPP 0253-275
Horiz. Scale:	Vert. Scale: As Noted					Revised:	Designer: JHK / Structure Numbers C-17-FX	23019
Unit Information	Unit Leader Initials						Detailer: JHK / C-17-FXA	
					Region 4 ALG	Void:	Sheet Subset: IRRIGATION / Subset Sheets: of	Sheet Number IR3.27

$PENTBL$S
$PLTDRVS$
$PLOT_INFO$
$DATE$

RFC SUBMITTAL - NOT FOR CONSTRUCTION - OCTOBER 25, 2021

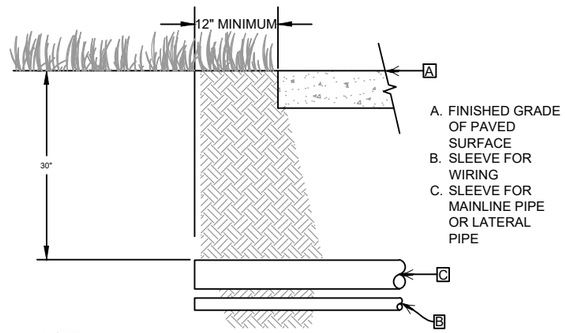

NOTE:
1. INSTALL SLEEVE SO THAT ITS LOWEST ELEVATION OCCURS AT ONE OR BOTH ENDS - NOT ALONG ITS LENGTH.

1 SLEEVE DETAIL

N.T.S.

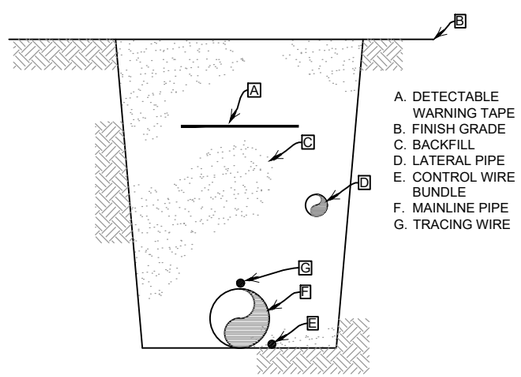

NOTE:
1. REFER TO IRRIGATION SPECIFICATIONS FOR COVERAGE DEPTH TO BURIED PIPE AND WIRE.

2 TRENCH DETAIL

N.T.S.

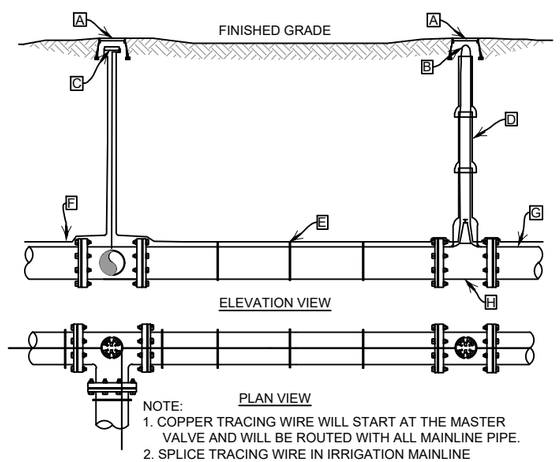

A. 10" ROUND VALVE BOX
B. INSTALL TRACING WIRE TO THE TOP OF VALVE BOX
C. WATER PROOF CONNECTION (SEE SPECIFICATIONS)
D. PIPE SLEEVE SEE VALVE DETAIL
E. TAPE COPPER WIRE TO TOP OF PIPE EVERY 10 FT.
F. CONTINUOUS LOOP COPPER TRACING WIRE (SEE SPECIFICATIONS)
G. PVC PIPE
H. VALVE (TYPICAL)

NOTE:
1. COPPER TRACING WIRE WILL START AT THE MASTER VALVE AND WILL BE ROUTED WITH ALL MAINLINE PIPE.
2. SPLICE TRACING WIRE IN IRRIGATION MAINLINE COMPONENT VALVE BOXES WHEN POSSIBLE, OTHERWISE, PLACE SPLICE IN SEPARATE VALVE BOX.

3 TRACING WIRE DETAIL

N.T.S.

Aqua Engineering Inc.
Innovative Water Solutions
375 E. Horsetooth Road, Building 2-202
Fort Collins, CO 80525-3196
970.229.9668
www.aquaengineering.com

Print Date:	Sheet Revisions			Colorado Department of Transportation	As Constructed
Drawing File Name:	Date:	Comments	Init.	1050 Lee Hill Road Boulder, CO 80302 Phone: 303-546-5676 FAX: 303-444-0751	No Revisions:
Horiz. Scale: Vert. Scale: As Noted					Revised:
Unit Information Unit Leader Initials				Region 4 ALG	Void:

I-25 EXPR. LANES SEG 5&6 CP5 URBAN DESIGN ELEMENTS IRRIGATION DETAILS				Project No./Code
				NHPP 0253-275
Designer: JHK	Structure Numbers	C-17-FX		23019
Detailer: JHK		C-17-FXA		
Sheet Subset: IRRIGATION	Subset Sheets:	of		Sheet Number IR3.37

$PENTBLS$
$PLTDRVS$
$PLOT_INFO$
$DATE$

RFC SUBMITTAL - NOT FOR CONSTRUCTION - OCTOBER 25, 2021

TABULATION OF APPROXIMATE LIGHTING QUANTITIES

CDOT PAY ITEM	DESCRIPTION	UNIT	QTY		NOTES
			Plan	As Const	
613-01100	1 INCH ELECTRICAL CONDUIT (PLASTIC)	LF	720		
613-01200	2 INCH ELECTRICAL CONDUIT (PLASTIC)	LF	2,300		
613-00306	3 INCH ELECTRICAL CONDUIT (BORED)	LF	900		
613-07002	TYPE TWO PULL BOX	EACH	10		
613-10000	WIRING	LS	1		
613-13000	LUMINAIRE (LED) (SPECIAL)	EACH	8		1
613-15000	FLOODLIGHT	EACH	24		2
613-15050	SPOT LIGHT	EACH	4		3
613-13005	LUMINAIRE (SPECIAL) (LED) (STEP LIGHT)	EACH	58		4
613-80010	BALLAST UNIT	EACH	2		5
613-40000	CONCRETE FOUNDATION PAD	EACH	2		
613-40010	LIGHT STANDARD FOUNDATION	EACH	32		6
613-50109	METER POWER PEDESTAL	EACH	2		
613-50132	2-PLEX RECEPTACLE (WITH BOX AND COVER)	EACH	12		7
700-70082	F/A FURNISH & INSTALL ELECTRICAL SERVICE	FA	1		

NOTES:
1. TYPE C LUMINAIRES
2. TYPE A LUMINAIRES
3. TYPE B LUMINAIRES
4. TYPE F LUMINAIRES
5. TYPE FD DRIVER FOR TYPE F LUMINAIRES
6. 12" DIAMETER X 48" DEEP FOR TYPES A, B, C
7. WEATHERPROOF GFCI LANDSCAPE RECEPTACLES WITH WHILE-IN-USE COVERS

LIGHTING AND ELECTRICAL LEGEND

SYMBOL	DESCRIPTION
A	NEW TYPE A - GRADE MOUNTED WALLWASHER, 15 WATT, WITH VISOR
B	NEW TYPE B - GRADE MOUNTED SPOTLIGHT, 15 WATT, WITH VISOR
C	NEW TYPE C - GRADE MOUNTED HORIZONTAL SPOTLIGHT, 15 WATT, WITH VISOR
F	NEW TYPE F - HANDRAIL MOUNTED ASYMMETRIC DOWNLIGHT, 2 WATT, REMOTE POWER SUPPLY
S2	SPLICE BOX TYPE 'S2' - 13"x24" CDOT/CITY TYPE 2 PULL/SPLICE BOX.
	3" HDPE BORE 48" UNDER ROADWAY.
	2" PVC SCHEDULE 80 CONDUIT BURIED AT 30" DEEP.
	1" PVC SCHEDULE 4 CONDIT BURIED AT 30" DEEP.
T	EXISTING PAD MOUNTED UTILITY TRANSFORMER.
EX	EXISTING POLE MOUNTED UTILITY TRANSFORMER.
FD	DRIVER IN WP BOX FOR TYPE 'F' LUMINAIRES.
M	MPCLTG: METER PEDESTAL - CDOT OWNED & MAINTAINED FOR LIGHTING MPCITS: METER PEDESTAL - CDOT OWNED & MAINTAINED FOR ITS DEVICES MPC PARKING & BUS: METER PEDESTAL - CDOT OWNED & MAINTAINED FOR PARKING LOT & BUS STATION.
WP GFI	DUPLEX, GFCI, RECEPTACLE WITH WEATHERPROOF BACK BOX AND WHILE-IN-USE COVER.
A	IRRIGATION CONTROLLER. LETTER INDICATES CONTROLLER REFERENCE PER IRRIGATION PLANS. CONFIRM ACTUAL LOCATION WITH LANDSCAPE PLANS.
	CIRCUIT HOMERUN. NUMBER OF ARROWS INDICATE NUMBER OF CIRCUITS.

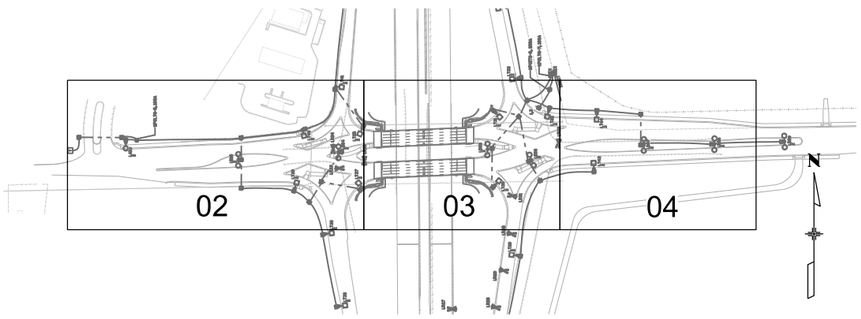

KEY MAP
NOT TO SCALE

811 Call before you dig. below

RFC SUBMITTAL - NOT FOR CONSTRUCTION - OCTOBER 25, 2021

Travis 5:57:18 PM pw:\\mullereng-pw.bentley.com:mullereng-pw-01\Documents\2012 Projects\12-003 I-25 SH 66 to SH 402\CP5\Lighting\Drawings\23019Lighting_SH60_Gen01.dgn
10/20/2021 CDOT-PDFHighQuality_V8i.pltcfg CDOT-ColorPenTable.tbl

Print Date: 10/20/2021	Sheet Revisions	Colorado Department of Transportation	As Constructed
Drawing File Name: 23019Lighting_SH60_Gen01.dgn	Date: / Comments / Init.	1050 Lee Hill Road, Boulder, CO 80302, Phone: 303-546-5676, FAX: 303-444-0751	No Revisions:
Horiz. Scale: 1:50 Vert. Scale: As Noted		Region 4 ALG	Revised:
Unit Information Unit Leader Initials			Void:
CLANTON & ASSOCIATES — LIGHTING DESIGN AND ENGINEERING, 4699 NAUTILUS COURT SOUTH STE. 102, BOULDER, CO 80301, 303-530-7229			

I-25 EXPRESS LANES SEG 5&6 LIGHTING & ELECTRICAL COVER SH60			Project No./Code
Designer: BN	Structure Numbers		NHPP 0253-275
Detailer: JE			23019
Sheet Subset: LIGHTING	Subset Sheets: 01 of 07		Sheet Number 8

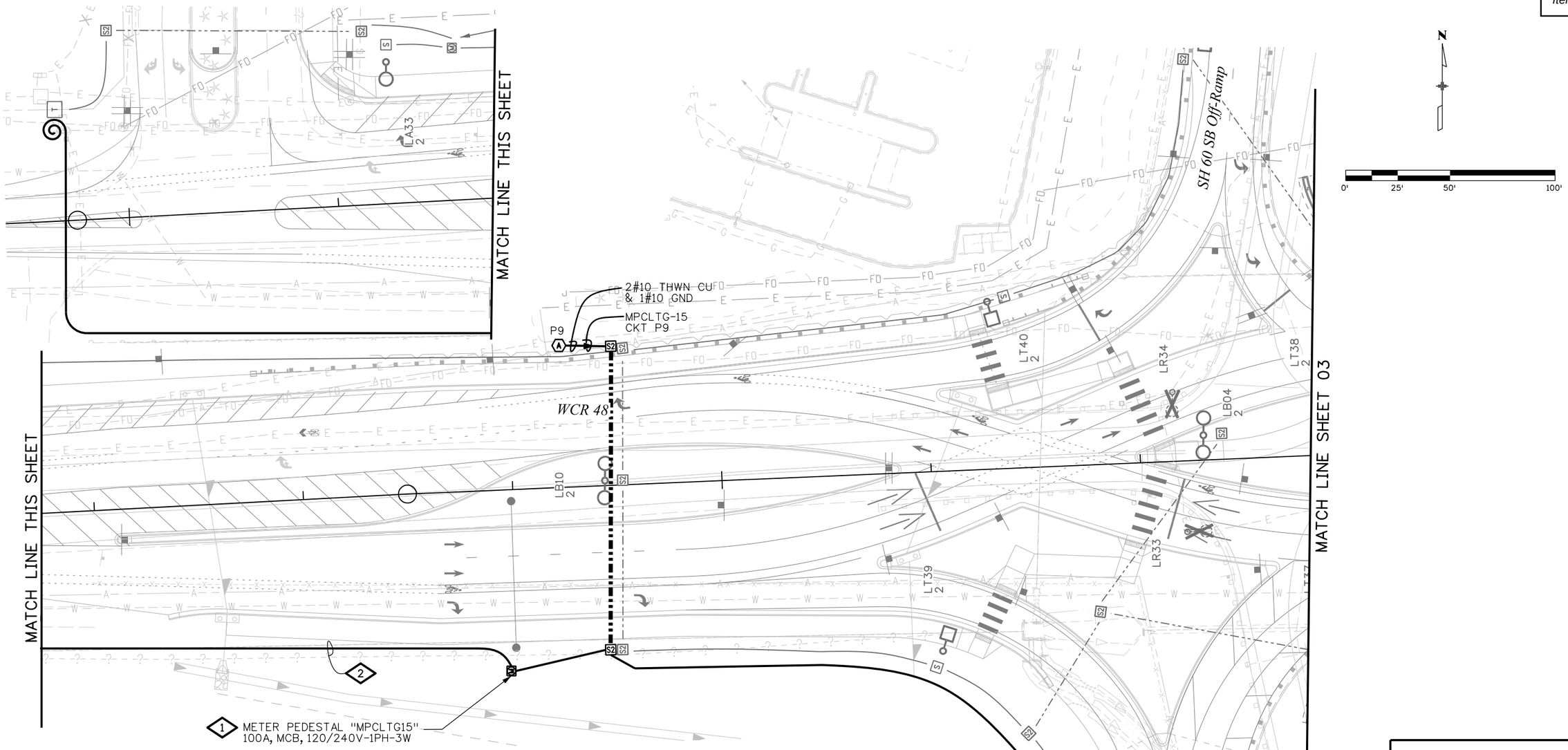

1 METER PEDESTAL "MPCLTG15"
100A, MCB, 120/240V-1PH-3W

NEW WORK NOTES:

1. PROVIDE METER POWER PEDESTAL AS SHOWN HERE AND AS DESCRIBED ON THE ONE-LINE DIAGRAM AND ELEVATION DETAIL ON SHEET #L-06. PROVIDE ALL MAIN AND BRANCH BREAKERS AS SHOWN ON THE PANEL SCHEDULE ON SHEET #L-07.
2. PROVIDE THIS SERVICE LATERAL AS SIZED ON THE ONE-LINE DIAGRAM ON SHEET #L-06.

GENERAL NOTES:

1. REFER TO CP2-3 FOR ALL LIGHTING AND ELECTRICAL SHOWN IN GRAY SCALE HERE.
2. REFER TO PANEL SCHEDULES FOR CONDUCTOR SIZE ASSOCIATED WITH EACH CIRCUIT. ALL CONDUCTORS TO BE THWN-CU. EACH CONDUIT SHALL INCLUDE A GROUND CONDUCTOR WHICH SHALL BE SIZED TO EQUAL OR BE GREATER THAN THE LARGEST CONDUCTOR SIZE WITHIN THE CONDUIT.

811 Call before you dig. below

Print Date: 10/20/2021	Sheet Revisions		
Drawing File Name: 23019Lighting_Plan_SH60_02.dgn	Date:	Comments	Init.
Horiz. Scale: 1:50 Vert. Scale: As Noted			
Unit Information Unit Leader Initials			
CLANTON & ASSOCIATES — LIGHTING DESIGN AND ENGINEERING, 4699 NAUTILUS COURT SOUTH STE. 102, BOULDER, CO 80301, 303-530-7229			

Colorado Department of Transportation
1050 Lee Hill Road
Boulder, CO 80302
Phone: 303-546-5676
FAX: 303-444-0751
Region 4 ALG

As Constructed
No Revisions:
Revised:
Void:

I-25 EXPR. LANES SEG 5&6 CP2-3
I-25 LIGHTING & ELECTRICAL PLAN
SH60

Designer: BN
Detailer: JE
Structure Numbers
Sheet Subset: LIGHTING
Subset Sheets: 02 of 07

Project No./Code
NHPP 0253-275
23019
Sheet Number 8

RFC SUBMITTAL - NOT FOR CONSTRUCTION - OCTOBER 25, 2021

Travis 5:57:21 PM pw:\\mullereng-pw.bentley.com:mullereng-pw-01\Documents\2012 Projects\12-003 I-25 SH 66 to SH 402\CP5\Lighting\Drawings\23019Lighting_Plan_SH60_02.dgn
10/20/2021 CDOT-PDFHighQuality_V8i.pltcfg CDOT-ColorPenTable.tbl

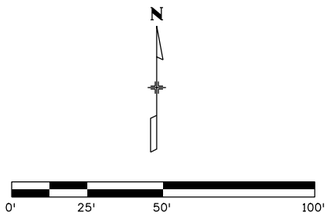

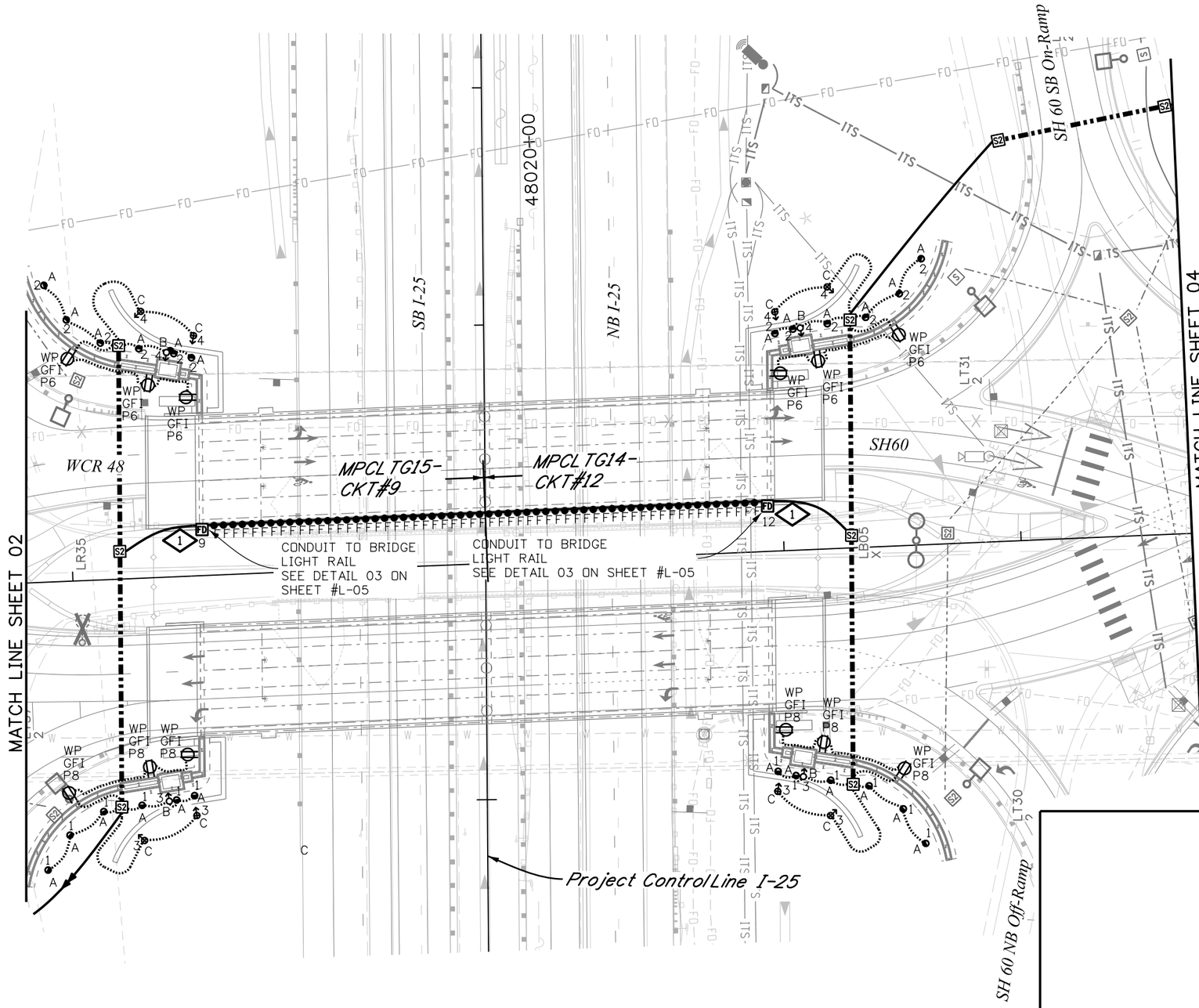

NEW WORK NOTES:

1. PROVIDE TYPE "FD" DRIVER IN THIS NEMA 4 BOX FOR THE NEW HANDRAIL LUMINAIRE TYPE "F" PER DETAIL 03 ON SHEET #L-05.

GENERAL NOTES:

1. REFER TO CP2-3 FOR ALL LIGHTING AND ELECTRICAL SHOWN IN GRAY SCALE HERE.
2. REFER TO PANEL SCHEDULES FOR CONDUCTOR SIZE ASSOCIATED WITH EACH CIRCUIT. ALL CONDUCTORS TO BE THWN-CU. EACH CONDUIT SHALL INCLUDE A GROUND CONDUCTOR WHICH SHALL BE SIZED TO EQUAL OR BE GREATER THAN THE LARGEST CONDUCTOR SIZE WITH THE CONDUIT.

811 Call before you dig. below

RFC SUBMITTAL - NOT FOR CONSTRUCTION - OCTOBER 25, 2021

Travis 6:27:14 PM pw:\\mulleren g-pw.bentley.com:mulleren g-pw-01\Documents\2012 Projects\12-003 I-25 SH 66 to SH 402\CP5\Lighting\Drawings\23019Lighting_Plan_SH60_03.dgn
10/20/2021 CDOT-PDFHighQuality_V8i.pltcfg CDOT-ColorPenTable.tbl

Print Date: 10/20/2021	Sheet Revisions	Date:	Comments	Init.
Drawing File Name: 23019Lighting_Plan_SH60_03.dgn				
Horiz. Scale: 1:50 Vert. Scale: As Noted				
Unit Information Unit Leader Initials				

CLANTON & ASSOCIATES
LIGHTING DESIGN AND ENGINEERING
4699 NAUTILUS COURT SOUTH STE. 102
BOULDER, CO 80301
303.530.7229

Colorado Department of Transportation
1050 Lee Hill Road
Boulder, CO 80302
Phone: 303-546-5676
FAX: 303-444-0751
Region 4 ALG

As Constructed
No Revisions:
Revised:
Void:

I-25 EXPR. LANES SEG 5&6
I-25 LIGHTING & ELECTRICAL PLAN
SH60

Designer:	BN	Structure Numbers	
Detailer:	JE		
Sheet Subset:	LIGHTING	Subset Sheets:	03 of 07

Project No./Code
NHPP 0253-275
23019
Sheet Number 81

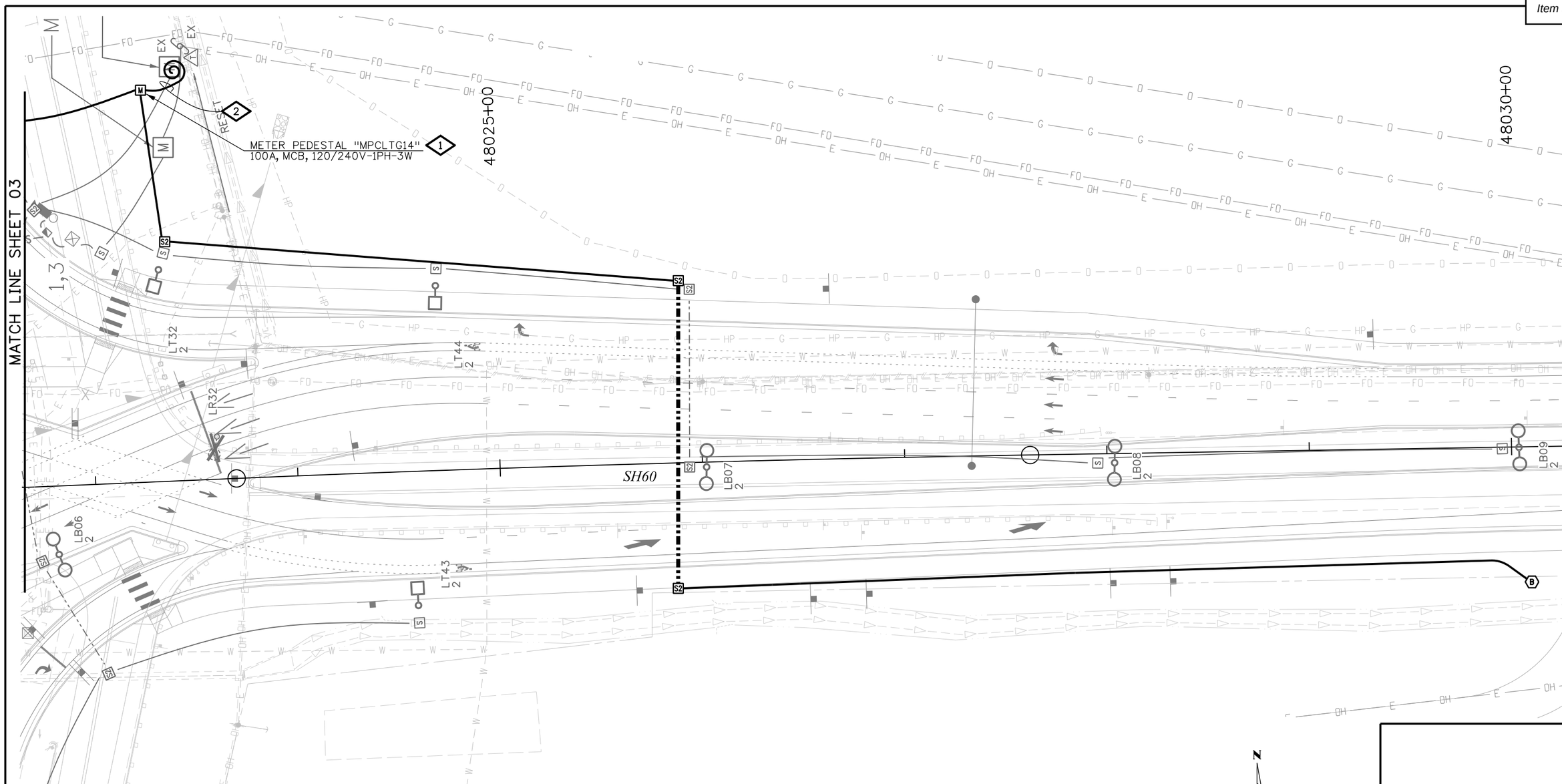

GENERAL NOTES:

1. REFER TO CP2-3 FOR ALL LIGHTING AND ELECTRICAL SHOWN IN GRAY SCALE HERE.
2. REFER TO PANEL SCHEDULES FOR CONDUCTOR SIZE ASSOCIATED WITH EACH CIRCUIT. ALL CONDUCTORS TO BE THWN-CU. EACH CONDUIT SHALL INCLUDE A GROUND CONDUCTOR WHICH SHALL BE SIZED TO EQUAL OR BE GREATER THAN THE LARGEST CONDUCTOR SIZE WITHIN THE CONDUIT.

NEW WORK NOTES:

1. PROVIDE METER POWER PEDESTAL AS SHOWN HERE AND AS DESCRIBED ON THE ONE-LINE DIAGRAM AND ELEVATION DETAIL ON SHEET #L-06. PROVIDE ALL MAIN AND BRANCH BREAKERS AS SHOWN ON THE PANEL SCHEDULE ON SHEET #L-07.
2. PROVIDE THIS SERVICE LATERAL AS SIZED ON THE ONE-LINE DIAGRAM ON SHEET #L-06.

0' 25' 50' 100'

811 Call before you dig. below

Print Date: 10/20/2021	Sheet Revisions		
Drawing File Name: 23019Lighting_Plan_SH60_04.dgn	Date:	Comments	Init.
Horiz. Scale: 1:50 Vert. Scale: As Noted			
Unit Information Unit Leader Initials			
CLANTON & ASSOCIATES — LIGHTING DESIGN AND ENGINEERING, 4699 NAUTILUS COURT SOUTH STE. 102, BOULDER, CO 80301, 303.530.7229			

Colorado Department of Transportation
1050 Lee Hill Road
Boulder, CO 80302
Phone: 303-546-5676
FAX: 303-444-0751
Region 4 ALG

As Constructed
No Revisions:
Revised:
Void:

I-25 EXPR. LANES SEG 5&6
I-25 LIGHTING & ELECTRICAL PLAN
SH60

Designer: BN
Detailer: JE
Structure Numbers
Sheet Subset: LIGHTING
Subset Sheets: 04 of 07

Project No./Code
NHPP 0253-275
23019
Sheet Number 83

RFC SUBMITTAL - NOT FOR CONSTRUCTION - OCTOBER 25, 2021

Travis 5:57:25 PM pw:\\mullereng-pw.bentley.com:mullereng-pw-01\Documents\2012 Projects\12-003 I-25 SH 66 to SH 402\CP5\Lighting\Drawings\23019Lighting_Plan_SH60_04.dgn
10/20/2021 CDOT-PDFHighQuality_V8i.pltcfg CDOT-ColorPenTable.tbl

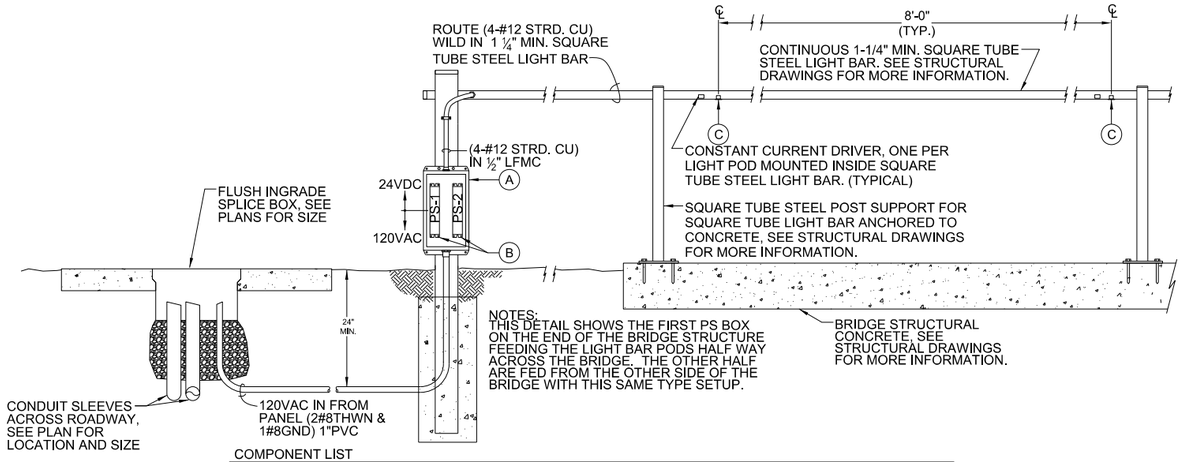

COMPONENT LIST

(A) 8" X 14" X 6"Dp. NEMA 4, ENCLOSURE WITH HINGED COVER AND BACK PANEL. KLIK USA #LPNEMA4ENCL, HAMMOND #EJ1486 OR APPROVED EQUAL. MOUNT ON BACK SIDE OF LIGHT BAR END SUPPORT POST.

(B) 96WATT, 120-277VAC PRIMARY, 24VDC SECONDARY POWER SUPPLY. SYLVANIA OPTOTRONIC #OT96W/24V/UNV/DIM OR APPROVED EQUAL. (2) REQUIRED UNLESS NOTED OTHERWISE.

(C) LED/POD EVERY 8'-0" ON CENTERS. SEE LUMINAIRE SCHEDULE FOR SPECIFICATIONS.

03/05 LIGHT BAR DETAIL
1"=20'

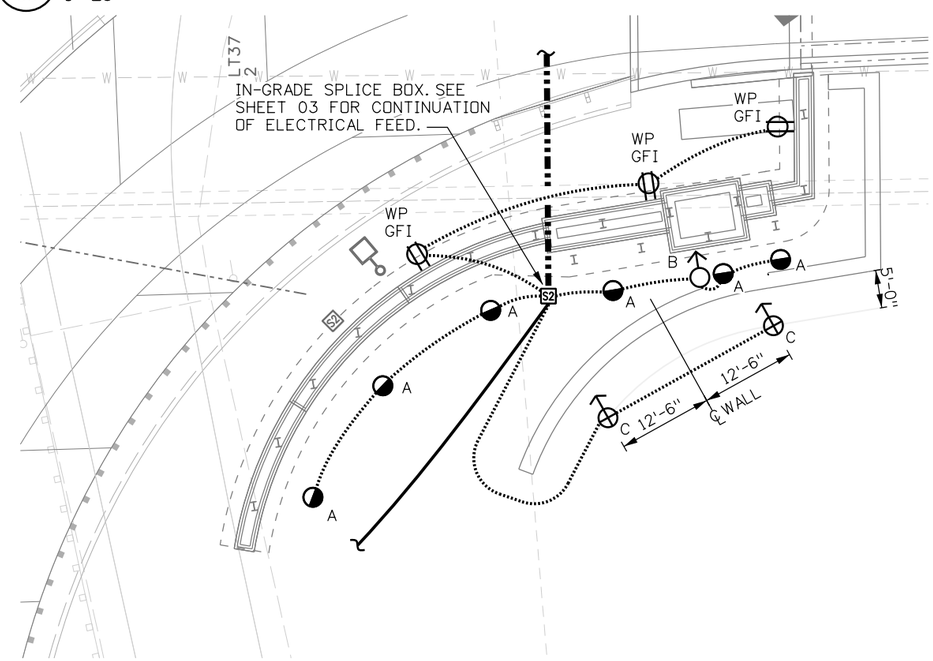

02/05 TYPICAL MONUMENT LIGHTING & ELECTRICAL DETAIL
1"=20'

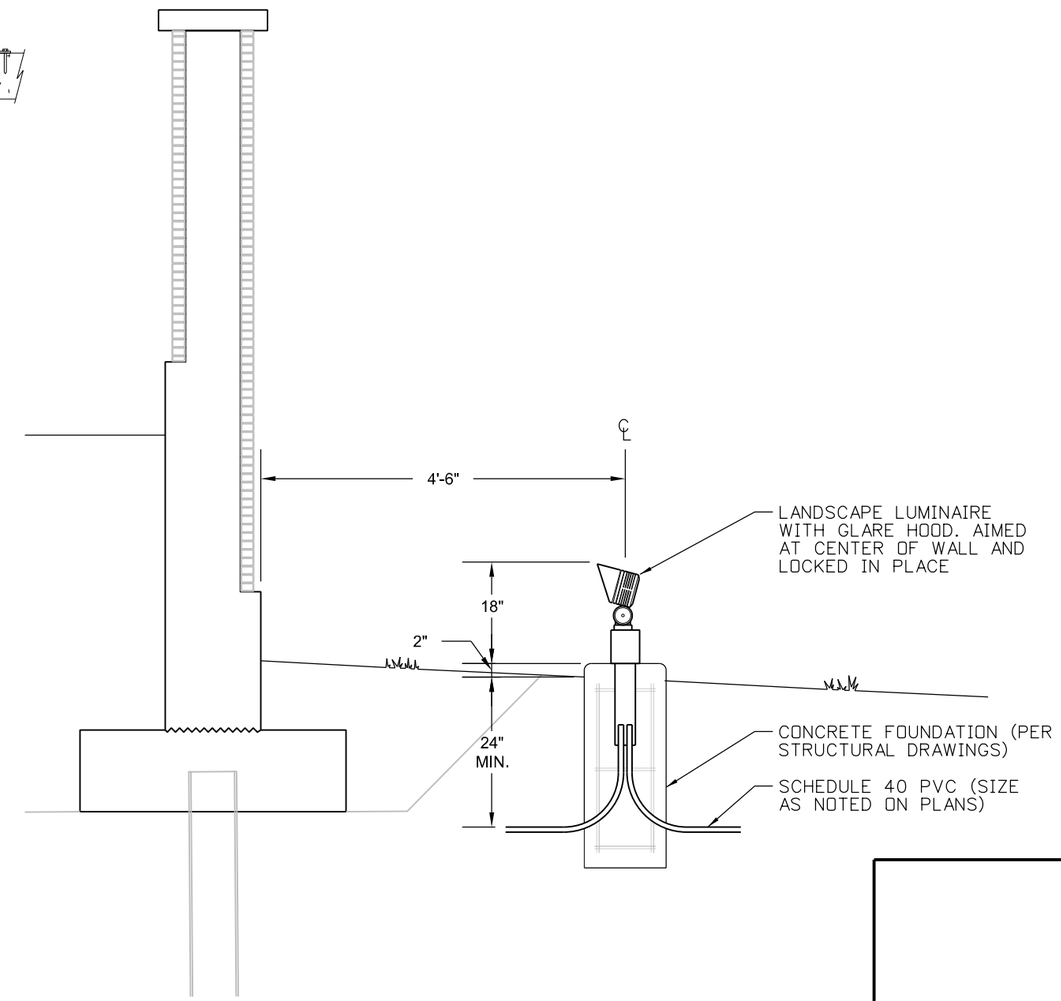

01/05 TYPE 'A' - 'B' - 'C' DETAIL
NOT TO SCALE

PLAN SYMBOL =

811 Call before you dig. below

Print Date: 10/20/2021	Sheet Revisions		
Drawing File Name: 23019Lighting_Plan_SH60_05.dgn	Date:	Comments	Init.
Horiz. Scale: 1:20 Vert. Scale: As Noted			
Unit Information Unit Leader Initials			

CLANTON & ASSOCIATES — LIGHTING DESIGN AND ENGINEERING, 4696 NAUTILUS COURT SOUTH STE. 102, BOULDER, CO 80301, 303-530-7229

Colorado Department of Transportation
1050 Lee Hill Road
Boulder, CO 80302
Phone: 303-546-5676
FAX: 303-444-0751
Region 4 ALG

As Constructed
No Revisions:
Revised:
Void:

I-25 EXPR. LANES SEG 5&6
I-25 LIGHTING & ELECTRICAL PLAN
TYPICAL MONUMENT

Designer: BN | Structure Numbers
Detailer: JE
Sheet Subset: LIGHTING | Subset Sheets: 05 of 07

Project No./Code
NHPP 0253-275
23019
Sheet Number 84

RFC SUBMITTAL - NOT FOR CONSTRUCTION - OCTOBER 25, 2021

Travis 6:17:26 PM pw:\\mullereng-pw.bentley.com:mullereng-pw-01\Documents\2012 Projects\12-003 I-25 SH 66 to SH 402\CP5\Lighting\Drawings\23019Lighting_Plan_SH60_05.dgn
10/20/2021 CDOT-PDFHighQuality_V8i.pltcfg CDOT-ColorPenTable.tbl

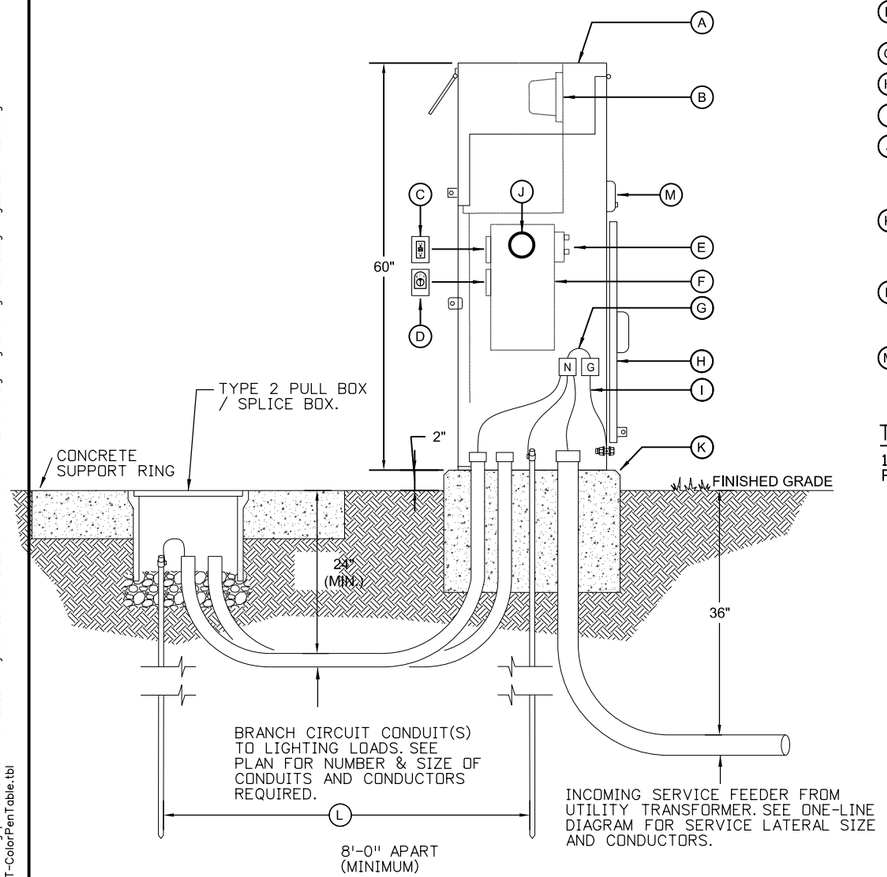

2 MPCLTG14 & 15 PANEL DETAIL

NOT TO SCALE

CABINET COMPONENT LIST

(A) FULLY HINGED METER/TEST SECTION LOCKABLE COVER WITH HOLD OPEN ARM TO KEEP COVER FROM BLOWING SHUT PER XCEL ENERGY SPECIFICATION. COMBINATION ALL-IN-ONE COMMERCIAL METER POWER PEDESTAL IN A NEMA 3R STAINLESS STEEL ENCLOSURE.

(B) UTILITY METER INSIDE NEMA 3R ENCLOSURE. METER SHALL HAVE LEVER BYPASS AND INTERNAL LOCKING TAB ON METER COVER.

(C) GFCI MAINTENANCE RECEPTACLE FLUSH MOUNTED IN PANEL DEAD FRONT INSIDE OF THE NEMA 3R ENCLOSURE.

(D) HAND-OFF-AUTO SWITCH - 15A-2P, HOA SWITCH WITH LEGEND FLUSH MOUNTED IN PANEL DEAD FRONT INSIDE OF THE NEMA 3R ENCLOSURE.

(E) UTILITY TERMINATION LANDING LUGS.

(F) LOAD CENTERS WITH SERVICE MAIN AND BRANCH BREAKERS. SEE PROVIDE PANEL SCHEDULE FOR BREAKERS REQUIRED.

(G) PROVIDE NEUTRAL TO GROUND BONDING JUMPER.

(H) LIFT OFF SERVICE COVER WITH PAD LOCK HASP.

(I) CABINET GROUND BOND #6 BARE COPPER CONDUCTOR.

(J) NEMA 3R 120V PHOTOELECTRIC CONTROL WITH 3-PRONG TWIST-LOCK RECEPTACLE BASE WIRED THROUGH THE H.O.A. SWITCH. THE PHOTOELECTRIC CONTROL SHALL BE MOUNTED ON THE NORTH SIDE ON ENCLOSURE TO MINIMIZE THE SUN'S INTERFERENCE.

(K) REINFORCED CONCRETE (CLASS B) FOUNDATION PER STRUCTURAL ENGINEER LICENSED IN THE STATE OF COLORADO. MINIMUM 2" ABOVE GRADE, 3/4" CHAMFER ALL EXPOSED EDGES, 3" MINIMUM (6" MAXIMUM) OVERLAP ON ALL SIDES.

(L) 3/4" X 8'-0" Lg. COPPER CLAD DRIVEN GROUND ROD. EXOTHERMIC WELD OR UNDERGROUND RATED LUG CONNECT CONDUCTOR TO GROUND ROD. (2) REQUIRED - 8'-0" APART (MIN.).

(M) T-HANDLE, PULL-OUT FUSE HOLDER WITH FRN-R FUSES, METER DISCONNECT FOR METER PROTECTION PER XCEL ENERGY STANDARDS, COLD SEQUENCE METER, WEATHERPROOF COVER WITH TAB LOCKABLE.

TYPICAL CABINET REQUIREMENTS:

100AMP MCB,120/240V-1Ph-3W STAINLESS STEEL, NEMA 3R, METER/ POWER PEDESTAL WITH SEPARATE SEALABLE AND LOCKABLE CUSTOMER SECTION WITH:

1. LOAD CENTER FOR ALWAYS ON LOADS THAT INCLUDE:

- SERVICE ENTRANCE M.C.B. - ENGINEER TO PROVIDE SIZE ON THE PANEL SCHEDULE.
- CONTROL POWER CIRCUIT BREAKER - ENGINEER TO PROVIDE SIZE ON THE PANEL SCHEDULE.
- SWITCHED LOAD CENTER MAIN BREAKER - ENGINEER TO PROVIDE ON THE PANEL SCHEDULE.
- BRANCH BREAKERS AS SHOWN - ENGINEER TO PROVIDE SIZE AND QUANTITY ON THE PANEL SCHEDULE.
- CIRCUIT DIRECTORY TO DOCUMENT CONFIGURATION IN POCKET ON HINGED DOOR.
- MAINTENANCE RECEPTACLE FLUSH MOUNTED IN DEAD FRONT INSIDE ENCLOSURE.

2. CONTROL CIRCUIT INCLUDING:

- PHOTOCELL RECEPTACLE, MOUNTED EXTERNALLY ON NEMA-3R ENCLOSURE.
- ONE HAND-OFF-AUTO (HOA) SWITCH FLUSH MOUNTED IN DEAD FRONT.
- ONE LIGHTING CONTACTOR CONTROLLING ONE LOAD CENTER IN THIS SECTION.
- ONE 12-CIRCUIT LOAD CENTER PHOTOCELL ON/OFF CONTROLLED.
- A CIRCUIT DIRECTORY TO DOCUMENT CONFIGURATION IN POCKET ON HINGED DOOR.

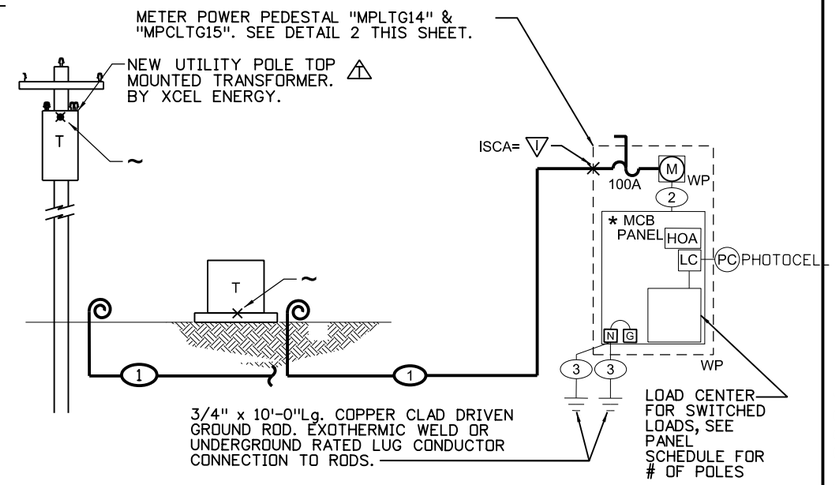

INDIVIDUAL PANEL FEEDER/FAULT CURRENT TABLE

PANEL DESIGNATION	UTILITY TRANSFORMER ESTIMATED SIZE POLE OR PAD MONTED	~ ISCA @ TRANSFORMER SECONDARY	(1) SERVICE LATERAL FROM TRANFORMER TO METER POWER PEDESTAL	SERVICE LATERAL MINIMUM LENGTH IN FEET	* MAIN CIRCUIT BREAKER	▽ AVAILABLE FAULT CURRENT @ PANEL
MPCLTG14	50KVA, POLE	14,800	NEW (3#1 XHHW CU)3"C.	50	100A	8,143 ISCA
MPCLTG15	50KVA, PAD	14,800	NEW (3#4/0 XHHW CU)3"C.	560	100A	2,881 ISCA

~ =SEE "INDIVIDUAL PANEL FEEDER/FAULT CURRENT TABLE" FOR ISC OF TRANSFORMER

▽ =SEE "INDIVIDUAL PANEL FEEDER/FAULT CURRENT TABLE" ON THIS SHEET FOR ISCA VALUE FOR EACH INDIVIDUAL PANEL.

* =SEE "INDIVIDUAL PANEL FEEDER/FAULT CURRENT TABLE" ON THIS SHEET FOR EACH INDIVIDUAL PANEL'S MAIN CIRCUIT BREAKER (MCB) AMPERAGE.

FEEDER SCHEDULE

(1) SEE "INDIVIDUAL PANEL FEEDER/FAULT CURRENT TABLE" ON THIS SHEET FOR THIS FEEDER SIZE.

(2) INTERNAL CONDUCTORS BY PANEL MANUFACTURER

(3) (1 #6 S.D.B.C.) 1/2"C

1 MPCLTG14 & 15 ONE-LINE DIAGRAM

NOT TO SCALE

RFC SUBMITTAL - NOT FOR CONSTRUCTION - OCTOBER 25, 2021

Travis 5:58:57 PM pw:\\mullereng-pw.bentley.com:mullereng-pw-01\Documents\2012 Projects\12-003 I-25 SH 66 to SH 402\CP5\Lighting\Drawings\23019Lighting_Dtl_SH60_06.dgn
10/20/2021 CDOT-PDFHighQuality_V8i.pltcfg CDOT-ColorPenTable.tbl

Print Date: 10/20/2021	
Drawing File Name: 23019Lighting_Dtl_SH60_06.dgn	
Horiz. Scale: 1:100	Vert. Scale: As Noted
Unit Information	Unit Leader Initials

CLANTON & ASSOCIATES — LIGHTING DESIGN AND ENGINEERING, 4699 NAUTILUS COURT SOUTH STE. 102, BOULDER, CO 80301, 303-630-7229

Sheet Revisions

Date:	Comments	Init.

Colorado Department of Transportation
1050 Lee Hill Road
Boulder, CO 80302
Phone: 303-546-5676
FAX: 303-444-0751
Region 4 ALG

As Constructed
No Revisions:
Revised:
Void:

I-25 EXPR. LANES SEG 5&6
LIGHTING & ELECTRICAL DETAILS
TYPICAL MONUMENT

Designer: BN
Detailer: JE
Structure Numbers
Sheet Subset: LIGHTING
Subset Sheets: 06 of 07

Project No./Code
NHPP 0253-275
23019
Sheet Number 8

MOUNTING: SURFACE — **PANEL "MPCLTG14"** — 120/240V-1PH-3W

NEMA 3R STAINLESS STEEL ENCLOSURE, SERVICE ENTRANCE RATED

FEEDER: BOTTOM — Minimum A.I.C.= 12,000 AMPS — 100 AMPS MAIN BREAKER CKT#P1,P3

BRANCH BREAKER

WIRE SIZE (AWG)	DESCRIPTION	Size	P	Ckt#	LEFT PHASE LOAD L1	LEFT PHASE LOAD L2		RIGHT PHASE LOAD L1	RIGHT PHASE LOAD L2	Ckt#	Size	P	DESCRIPTION
	SERVICE ENTRANCE	100		P1	1720			1000		P2	60		BOTTOM SECTION MCB
	MAIN CIRCUIT BREAKER		2	P3		2240			1500	P4		2	PC ON / TS OFF
#10	MPCLTG14 MAINT. RECEPT.	20	1	P5	180			540		P6	20	1	NE MONUMENT RECEPTACLES
#12	MPCLTG14 LTG. CONTROL CKT.	15	1	P7		200			540	P8	20	1	SE MONUMENT RECEPTACLES
#10	IRRIGATION CONTROLLER			P9						P10			SPACE ONLY
	SPACE ONLY			P11						P12			SPACE ONLY
	SPACE ONLY			P13						P14			SPACE ONLY
	SPACE ONLY			P15						P16			SPACE ONLY
	[BOTTOM SECTION IS ON/OFF CONTROL WITH BUILT-IN 60A 2-POLE CONTACTOR, FED FROM THE TOP SECTION BREAKER CKT#P2,P4] [CONTACTOR COIL IS OPERATED BY BUILT-IN PHOTOCELL (ON/OFF CONTROL) W/HOA SWITCH]												
#10	SE MONUMENT LIGHTING	20	1	1	500			500		2	20	1	NE MONUMENT LIGHTING
#10	SE MONUMENT LIGHTING	20	1	3		500			500	4	20	1	NE MONUMENT LIGHTING
	SPARE	20	1	5						6	20	1	SPARE
	SPARE	20	1	7						8	20	1	SPARE
	SPARE	20	1	9						10	20	1	SPARE
	SPARE	20	1	11					500	12	20	1	BRIDGE RAIL LIGHTING
	SPACE ONLY			13						14			SPACE ONLY
	SPACE ONLY			15						16			SPACE ONLY
					680	700		1040	1540				
					1720	2240	Total Connected V.A.						
						3960	=Total Connected VA Both Phases						

LOAD	CONNECTED	D.FACT.	Est. KVA	AMPS
LIGHTING	2500 VA	1.25	3.13	
RECEPTACLES (1ST 10000)	1260 VA	1.00	1.26	
RECEPTACLES (REMAINING)	VA	0.50	0.00	
MOTOR (LARGEST)	0 VA	1.25	0.00	
MOTORS (REMAINING)	0 VA	1.00	0.00	
ELECTRICAL HEATING	0 VA	1.25	0.00	
ELECTRICAL MISC.	200 VA	1.00	0.20	
TOTAL ESTIMATED LOAD	3960 VA		4.59	19

1260 VA=Total Receptacle Load

MOUNTING: SURFACE — **PANEL "MPCLTG15"** — 120/240V-1PH-3W

NEMA 3R STAINLESS STEEL ENCLOSURE, SERVICE ENTRANCE RATED

FEEDER: BOTTOM — Minimum A.I.C.= 12,000 AMPS — 100 AMPS MAIN BREAKER CKT#P1,P3

BRANCH BREAKER

WIRE SIZE (AWG)	DESCRIPTION	Size	P	Ckt#	LEFT PHASE LOAD L1	LEFT PHASE LOAD L2		RIGHT PHASE LOAD L1	RIGHT PHASE LOAD L2	Ckt#	Size	P	DESCRIPTION
	SERVICE ENTRANCE	100		P1	1640			740		P2	60		BOTTOM SECTION MCB
	MAIN CIRCUIT BREAKER		2	P3		860			120	P4		2	PC ON / TS OFF
#10	MPCLTG15 MAINT. RECEPT.	20	1	P5	180			540		P6	20	1	NW MONUMENT RECEPTACLES
#12	MPCLTG15 LTG. CONTROL CKT.	15	1	P7		200			540	P8	20	1	SW MONUMENT RECEPTACLES
#10	IRRIGATION CONTROLLER	20	1	P9	180					P10			SPACE ONLY
	SPACE ONLY			P11						P12			SPACE ONLY
	SPACE ONLY			P13						P14			SPACE ONLY
	SPACE ONLY			P15						P16			SPACE ONLY
	[BOTTOM SECTION IS ON/OFF CONTROL WITH BUILT-IN 60A 2-POLE CONTACTOR, FED FROM THE TOP SECTION BREAKER CKT#P2,P4] [CONTACTOR COIL IS OPERATED BY BUILT-IN PHOTOCELL (ON/OFF CONTROL) W/HOA SWITCH]												
#10	SW MONUMENT LIGHTING	20	1	1	120			120		2	20	1	NW MONUMENT LIGHTING
#10	SW MONUMENT LIGHTING	20	1	3		60			60	4	20	1	NW MONUMENT LIGHTING
	SPARE	20	1	5						6	20	1	SPARE
	SPARE	20	1	7						8	20	1	SPARE
#10	BRIDGE RAIL LIGHTING	20	1	9	500					10	20	1	SPARE
	SPARE	20	1	11						12	20	1	SPARE
	SPACE ONLY			13						14			SPACE ONLY
	SPACE ONLY			15						16			SPACE ONLY
					980	260		660	600				
					1640	860	Total Connected V.A.						
						2500	=Total Connected VA Both Phases						

LOAD	CONNECTED	D.FACT.	Est. KVA	AMPS
LIGHTING	860 VA	1.25	1.08	
RECEPTACLES (1ST 10000)	1260 VA	1.00	1.26	
RECEPTACLES (REMAINING)	VA	0.50	0.00	
MOTOR (LARGEST)	0 VA	1.25	0.00	
MOTORS (REMAINING)	0 VA	1.00	0.00	
ELECTRICAL HEATING	0 VA	1.25	0.00	
ELECTRICAL MISC.	380 VA	1.00	0.38	
TOTAL ESTIMATED LOAD	2500 VA		2.72	11

1260 VA=Total Receptacle Load

RFC SUBMITTAL - NOT FOR CONSTRUCTION - OCTOBER 25, 2021

Travis 5:58:59 PM pw:\\mullereng-pw.bentley.com:mullereng-pw-01\Documents\2012 Projects\12-003 I-25 SH 66 to SH 402\CP5\Lighting\Drawings\23019Lighting_Schedule_SH60_07.dgn
10/20/2021 CDOT-PDFHighQuality_V8i.pltcfg CDOT-ColorPenTable.tbl

Print Date: 10/20/2021
Drawing File Name: 23019Lighting_Schedule_SH60_07.dgn
Horiz. Scale: 1:100 Vert. Scale: As Noted
Unit Information Unit Leader Initials

CLANTON & ASSOCIATES
LIGHTING DESIGN AND ENGINEERING
4699 NAUTILUS COURT SOUTH STE. 102
BOULDER, CO 80301
303-530-7229

Sheet Revisions		
Date:	Comments	Init.

Colorado Department of Transportation
1050 Lee Hill Road
Boulder, CO 80302
Phone: 303-546-5676
FAX: 303-444-0751
Region 4 ALG

As Constructed
No Revisions:
Revised:
Void:

I-25 EXPR. LANES SEG 5&6
LIGHTING & ELECTRICAL DETAILS
SH60

Designer: BN
Detailer: JE
Structure Numbers
Sheet Subset: SCHEDULES
Subset Sheets: 07 of 07

Project No./Code
NHPP 0253-275
23019
Sheet Number 8

COLORADO
DEPARTMENT OF TRANSPORTATION
SPECIAL PROVISIONS
NORTH I-25 EXPRESS LANES SEGMENTS 5 AND 6 – CP5

The 2019 Standard Specifications for Road and Bridge Construction controls construction of this project. The following special provisions supplement or modify the Standard Specifications and take precedence over the Standard Specifications and plans.

PROJECT SPECIAL PROVISIONS

	Date	Page #
Index Pages	October 25, 2021	1-2
Notice to Bidders	October 25, 2021	3
Disadvantaged Business Enterprise (DBE) Contract Goal	October 25, 2021	4
Commencement and Completion of Work (Specified Completion Date)	October 25, 2021	5
On the Job Training Contract Goal	October 25, 2021	6
Revision of Section 102 - Project Plans and Other Data	October 25, 2021	7
Revision of Section 104 – Construction Manager/General Contractor Value Engineering Change Proposals	October 25, 2021	8
Revision of Section 107 - Performance of Safety Critical Work	October 25, 2021	9-11
Revision of Section 107 – OCIP Responsibility for Damage Claims, Insurance Types and Coverage Limits, Owner Controlled Insurance Program (OCIP) and Project Insurance Manual (PIM)	October 25, 2021	12-29
Revision of Section 109 – CMGC Overrun Pool	October 25, 2021	30-34
Revision of Section 206 – Shoring	October 26, 2021	35-36
Revision of Section 212 – Seeding, Fertilizer, Soil Conditioning and Sodding	October 25, 2021	37-38
Revision of Section 213 – Mulching	October 25, 2021	39-41
Revision of Section 214 – Planting	October 25, 2021	42-43
Revision of Section 214 – Landscape Maintenance (12 Months)	October 25, 2021	44
Revision of Section 509 – Painted Structural Steel	October 25, 2021	45
Revision of Section 519 – Architectural Components	October 25, 2021	46-56
Revision of Section 601 and 708 – Structural Concrete Stain	October 25, 2021	57-60
Revision of Section 607 – Fence (Special)	October 25, 2021	61
Revision of Section 609 – Curb (Special)	October 25, 2021	62
Revision of Section 613 – Electrical Conductor Identification	October 25, 2021	63
Revision of Section 613 – Wiring	October 25, 2021	64
Revision of Section 613 – Lighting	October 25, 2021	65-67
Revision of Section 614 – Global Positioning System (GPS)	October 25, 2021	68-70
Revision of Section 622 – Planter Boxes	October 25, 2021	71-73
Revision of Section 623 – Sprinkler System	October 25, 2021	74
Revision of Section 625 – Construction Surveying	October 25, 2021	75
Revision of Section 626 – Mobilization	October 25, 2021	76
Revision of Section 626 – Public Information Management (Tier I)	October 25, 2021	77-91
Revision of Section 715 – Lighting and Electrical Materials	October 25, 2021	92-93
Force Account Items	October 25, 2021	94
Traffic Control Plan – General	October 25, 2021	95

COLORADO
DEPARTMENT OF TRANSPORTATION
SPECIAL PROVISIONS
NORTH I-25 EXPRESS LANES SEGMENTS 5 AND 6 – CP5

STANDARD SPECIAL PROVISIONS

	Date	No. of Pages
Revision of Section 101 – Holidays	(Sept. 17, 2020)	1
Revision of Section 101 – Definitions and Terms	(June 23, 2021)	1
Revision of Section 101 – Record Set	(January 20, 2021)	1
Revision of Section 104 – Scope of Work	(January 20, 2021)	1
Revision of Section 106 – Control of Material	(June 23, 2021)	1
Revision of Section 107 – Legal Relations and Responsibility to the Public	(January 20, 2021)	1
Revision of Section 107 – Project Safety Management Plan	(April 13, 2020)	1
Revision of Section 108 – Prosecution and Progress	(June 23, 2021)	1
Revision of Section 108 – Liquidated Damages	(June 18, 2021)	1
Revision of Section 601 – Concrete Mix Designs	(March 30, 2021)	1
Revision of Section 601 – Structural Concrete	(October 4, 2019)	17
Revision of Section 625 – Construction Surveying	(January 20, 2021)	1
Affirmative Action Requirements – Equal Employment Opportunity	(October 1, 2019)	10
Disadvantaged Business Enterprise (DBE) Requirements	(October 1, 2019)	6
Minimum Wages, Colorado, U.S. Department of Labor General Decision Number CO20220014 Highway Construction for Larimer, Mesa, and Weld Counties	(January 7, 2022)	7
On the Job Training	(October 1, 2019)	4
Project First Program	(October 1, 2019)	2
Required Contract Provisions – Federal-Aid Construction Contracts	(June 18, 2021)	14
Special Construction Requirements, Fire Protection Plan	(October 1, 2019)	2

NOTICE TO BIDDERS

The proposal guaranty shall be a certified check, cashier's check, or bid bond in the amount of 5 percent of the Contractor's total bid.

Pursuant to subsections 102.04 and 102.05, it is recommended that bidders on this project review the work site and plan details with an authorized Department representative. Prospective bidders shall contact one of the following listed authorized Department representatives at least 12 hours in advance of the time they wish to go over the project.

Program Engineer -	Keith Sheaffer Office Phone:	(970) 350-2162
Resident Engineer -	Abra Geissler Cell Phone:	(303) 995-3008
Project Engineer -	Benjamin Rowles Cell Phone:	(970) 405-3602

The above referenced individuals are the only representatives of the Department with authority to provide any information, clarification, or interpretation regarding the plans, specifications, and any other contract documents or requirements.

Questions received from bidders along with CDOT responses will be posted on the CDOT web site listed below as they become available.

http://www.coloradodot.info/business/bidding/future-bidding-opportunities

If the bidder has a question or requests clarification that involves the bidder's innovative or proprietary means and methods, phasing, scheduling, or other aspects of construction of the project, the Project Engineer will direct the bidder to contact the Resident Engineer directly to address the question or clarification. The Resident Engineer will keep the bidder's innovation confidential and will not share this information with other bidders.

The Resident Engineer will determine whether questions are innovative or proprietary in nature. If the Resident Engineer determines that a question does not warrant confidentiality, the bidder may withdraw the question. If the bidder withdraws the question, the Resident Engineer will not answer the question and the question will not be documented on the CDOT web site. If the bidder does not withdraw the question, the question will be answered, and both the question and CDOT answer will be posted on the web site. If the Resident Engineer agrees that a question warrants confidentiality, the Resident Engineer will answer the question, and keep both question and answer confidential. CDOT will keep a record of both question and answer in their confidential file.

All questions shall be directed to the CDOT contacts listed above no later than 7:00 A.M. Monday of the week of bid opening. Final questions and answers will be posted no later than Tuesday morning of bid opening week.

Questions and answers shall be used for reference only and shall not be considered part of the Contract.

Disadvantaged Business Enterprise (DBE) Contract Goal

This is a federally-assisted construction project. As described in the CDOT DBE Standard Special Provision, the Bidder shall make good faith efforts to meet the following contract goal:

10% Percent DBE participation.

COMMENCEMENT AND COMPLETION OF WORK
(SPECIFIED COMPLETION DATE)

The Contractor shall select the date that work begins for this project. The Contractor shall notify the Engineer, in writing, at least 15 days before the proposed beginning date. The date that work begins shall be subject to the Region Transportation Director's approval. A different date may be authorized in writing by the Chief Engineer in the "Notice to Proceed."

Regardless of the date the Contractor chooses to begin work, the Contractor shall complete all work by the end of the day on December 4, 2023 in accordance with the "Notice to Proceed", including Final Acceptance in accordance with Section 105.21. Liquidated damages will be assessed in accordance with Section 108.09.

Subsection 108.05 shall include the following:

The Contractor shall complete the following discrete portions of the work (milestones) within the time allowance specified and/or the dates specified. A disincentive will be assessed for failure to complete the work for each milestone for failure to complete the work within the time allowance or by the specified completion date.

Milestone No. 1 – Substantial Completion

Completion Date: February 15, 2023

Substantial Completion requires all work in this contract to be complete and accepted by the Department, including correction of Punchlist items, with the following exceptions:

- Permanent landscape items (Seeding, Deciduous Trees
- Permanent stabilization
- Curb and Gutter not able to be constructed until removal of temporary pavement in place from other nearby construction contracts (CP2-3).

Upon issuance of Substantial Completion, the Department shall release the Contractor from maintenance responsibility of the constructed work under this contract, and shall assume the maintenance responsibility of said work, thereof.

ON THE JOB TRAINING CONTRACT GOAL

The Department has determined that On the Job Training shall be provided to trainees with the goal of developing full journey workers in the types of trade or classification involved. The contract goal for On the Job Trainees working in an approved training plan in this Contract has been established as follows:

Minimum number of total On the Job Training hours required: 1,280 hours

REVISION OF SECTION 102
PROJECT PLANS AND OTHER DATA

Section 102 of the Standard Specifications is hereby revised for this project as follows:

Subsection 102.05 shall include the following:

3D modeling data is available in Land XML and vectorized PDF formats. These documents may be obtained by contacting the Resident Engineer listed in the Notice to Bidders. Available 3D modeling data consists of:

- Existing Ground Terrain Models
- Design Ground Terrain Models

The following information will be available for review in the office of the Resident Engineer listed in the Notice to Bidders until the date set for opening of bids:

Released for Construction Plans
Soils Report
Hydraulics Report
Structure Selection Reports
Pavement Design Report

The Department does not warrant the 3D modeling data and this information is not considered to be a part of the Contract. If bidders use the 3D modeling data in preparing a proposal or planning and prosecuting the work, it is used at their own risk, and bidders are responsible for all conclusions, deductions, and inferences drawn from the 3D modeling data.

After the proposals have been opened, the low responsible bidder may obtain electronic sets of plans and special provisions from the CDOT Business Management System (B2Gnow) website here: https://cdot.dbesystem.com/. Also, if they are available for the project, the low responsible bidder may also obtain cross sections, major structure plan sheets, and computer output data.

Survey information is available at the Resident Engineer's office for review.

REVISION OF SECTION 104
CONSTRUCTION MANAGER / GENERAL CONTRACTOR
VALUE ENGINEERING CHANGE PROPOSALS

Section 104 of the Standard Specifications is hereby revised for this project as follows:

Delete subsection 104.07 and replace with the following:

104.07 Value Engineering Change Proposals. Value Engineering Change Proposals (VECP) will not be accepted during the construction of CM/CG Projects.

1
REVISION OF SECTION 107
PERFORMANCE OF SAFETY CRITICAL WORK

Section 107 of the Standard Specifications is hereby revised for this project as follows:

Add subsection 107.061 immediately following subsection 107.06 as follows:

107.061 Performance of Safety Critical Work. The following work elements are considered safety critical work for this project:

(1) Temporary works: falsework, shoring that exceeds 5 feet in height, cofferdams, and temporary bridges
(2) Excavation and embankment adjacent to the roadway, especially if it requires shoring
(3) Work operations such as pile driving and jack hammering which may create vibration and cause debris to fall into traffic.

The Contractor shall submit, for record purposes only, an initial detailed construction plan that addresses safe construction of each of the safety critical elements. When the specifications already require an erection plan, a bridge removal plan, or a removal of portion of bridge plan, it shall be included as a part of this plan. The detailed construction plan shall be submitted two weeks prior to the safety critical element conference described below. The construction plan shall be stamped "Approved for Construction" and signed by the Contractor. The construction plan will not be approved by the Engineer.

The Construction Plan shall include the following:

(1) Safety Critical Element for which the plan is being prepared and submitted.
(2) Contractor or subcontractor responsible for the plan preparation and the work.
(3) Schedule, procedures, equipment, and sequence of operations, that comply with the working hour limitations
(4) Temporary works required: falsework, bracing, shoring, etc.
(5) Additional actions that will be taken to ensure that the work will be performed safely.
(6) Names and qualifications of workers who will be in responsible charge of the work:
    A. Years of experience performing similar work
    B. Training taken in performing similar work
    C. Certifications earned in performing similar work
(7) Names and qualifications of workers operating cranes or other lifting equipment
    A. Years of experience performing similar work
    B. Training taken in performing similar work
    C. Certifications earned in performing similar work

2
REVISION OF SECTION 107
PERFORMANCE OF SAFETY CRITICAL WORK

(8) The construction plan shall address how the Contractor will handle contingencies such as:
   A. Unplanned events (storms, traffic accidents, etc.)
   B. Structural elements that don't fit or line up
   C. Work that cannot be completed in time for the roadway to be reopened to traffic
   D. Replacement of workers who don't perform the work safely
   E. Equipment failure
   F. Other potential difficulties inherent in the type of work being performed

(9) Name and qualifications of Contractor's person designated to determine and notify the Engineer in writing when it is safe to open a route to traffic after it has been closed for safety critical work.

(10) Erection plan or bridge removal plan when submitted as required elsewhere by the specifications. Plan requirements that overlap with above requirements may be submitted only once.

A safety critical element conference shall be held two weeks prior to beginning construction on each safety critical element. The Engineer, the Contractor, the safety critical element subcontractors, and the Contractor's Engineer shall attend the conference. Required pre-erection conferences or bridge removal conferences may be included as a part of this conference.

After the safety critical element conference, and prior to beginning work on the safety critical element, the Contractor shall submit a final construction plan to the Engineer for record purposes only. The Contractor's Engineer shall sign and seal temporary works, such as falsework, shoring etc., related to construction plans for the safety critical elements, (3) Removal of Bridge, (4) Removal of Portion of Bridge and (5) Temporary Works. The final construction plan shall be stamped "Approved for Construction" and signed by the Contractor.

The Contractor shall perform safety critical work only when the Engineer is on the project site. The Contractor's Engineer or approved designee shall be on site to inspect and provide written approval of safety critical work for which he provided signed and sealed construction details. Unless otherwise directed or approved, the Contractor's Engineer or approved designee need not be on site during the actual performance of safety critical work, but shall be present to conduct inspection for written approval of the safety critical work.

When ordered by the Engineer, the Contractor shall immediately stop safety critical work that is being performed in an unsafe manner or will result in an unsafe situation for the traveling public. Prior to stopping work, the Contractor shall make the situation safe for work stoppage. The Contractor shall submit an acceptable plan to correct the unsafe process before the Engineer will authorize resumption of the work.

When ordered by the Engineer, the Contractor shall remove workers from the project that are performing the safety critical work in a manner that creates an unsafe situation for the public in accordance with subsection 108.06.

Should an unplanned event occur or the safety critical operation deviate from the submitted plan, the Contractor shall immediately cease operations on the safety critical element, except for performing any work necessary to ensure worksite safety, and provide proper protection of the work and the traveling public. If the Contractor intends to modify the submitted plan, he shall submit a revised plan to the Engineer prior to resuming operations.

3
REVISION OF SECTION 107
PERFORMANCE OF SAFETY CRITICAL WORK

All costs associated with the preparation and implementation of each safety critical element construction plan will not be measured and paid for separately, but shall be included in the work.

Nothing in the section shall be construed to relieve the Contractor from ultimate liability for unsafe or negligent acts or to be a waiver of the Colorado Governmental Immunity Act on behalf of the Department.

1
REVISION OF SECTION 107 – OCIP
RESPONSIBILITY FOR DAMAGE CLAIMS, INSURANCE TYPES AND COVERAGE LIMITS, OWNER CONTROLLED INSURANCE PROGRAM (OCIP) AND PROJECT INSURANCE MANUAL (PIM)

Section 107 of the Standard Specifications is hereby revised for this project as follows:

Delete subsection 107.15 and replace with the following:

107.15 Responsibility for Damage Claims, Insurance Types and Coverage Limits, Owner Controlled Insurance Program (OCIP) and Project Insurance Manual (PIM). The Contractor shall indemnify and save harmless the Department, its officers, and employees, from suits, actions, or claims of any type or character brought because of any and all injuries or damage received or sustained by any person, persons, or property on account of the operations of the Contractor; or failure to comply with the provisions of the Contract; or on account of or in consequence of neglect of the Contractor in safeguarding the work; or through use of unacceptable materials in constructing the work; or because of any act or omission, neglect, or misconduct of the Contractor; or because of any claims or amounts recovered from any infringements of patent, trademark, or copyright, unless the design, device, material or process involved is specifically required by the Contract; or from any claims or amounts arising or recovered under the Worker's Compensation Act, or other law, ordinance, order, or decree. The Department may retain as much of any moneys due the Contractor under any Contract as may be determined by the Department to be in the public interest.

(a) The Contractor shall obtain, and maintain at all times during the term of this Contract, insurance in the following kinds and amounts:

(1) Workers' Compensation Insurance as required by state statute, and Employer's Liability Insurance covering all of Contractor's employees acting within the course and scope of their employment.

(i) The Contractor shall provide Workers' Compensation coverage that is in compliance with all Legal Requirements (including C.R.S. § 8-44-101, et seq.) and Employer's Liability with minimum limits of $1,000,000 by disease each person, $1,000,000 by disease aggregate, and $1,000,000 each person by accident.

(ii) Subcontractors shall provide Workers' Compensation coverage that is in compliance with all Legal Requirements (including C.R.S. § 8-44-101, et seq.) and Employer's Liability with minimum limits of $500,000 by disease each person, $500,000 by disease aggregate, and $500,000 each person by accident.

(2) Commercial General Liability Insurance written on ISO occurrence form CG 00 01 07/04 or equivalent, covering premises operations, fire damage, independent Contractors, products and completed operations, blanket contractual liability, personal injury, and advertising liability with minimum limits as follows:

(i) $1,000,000 each occurrence;

(ii) $2,000,000 general aggregate;

(iii) $2,000,000 products and completed operations aggregate; and

2
REVISION OF SECTION 107 – OCIP
RESPONSIBILITY FOR DAMAGE CLAIMS, INSURANCE TYPES AND COVERAGE LIMITS, OWNER CONTROLLED INSURANCE PROGRAM (OCIP) AND PROJECT INSURANCE MANUAL (PIM)

(iv) $50,000 any one fire.

(v) Completed Operations coverage shall be provided for a minimum period of eight years following final acceptance of work. If any aggregate limit is reduced below $1,000,000 because of claims made or paid, the Contractor shall immediately obtain additional insurance to restore the full aggregate limit and furnish to CDOT a certificate or other document satisfactory to CDOT showing compliance with this provision.

(3) Automobile Liability Insurance covering any auto (including owned, hired and non-owned autos) with a minimum limit as follows: $1,000,000 each accident combined single limit.

1. The policy will include uninsured and underinsured, in compliance with Colorado law.
2. The policy shall be endorsed to include Motor Carrier Act endorsement – Hazardous Materials Cleanup (MCS-90), if applicable.

(4) Professional liability insurance with minimum limits of liability of not less than $1,000,000 Each Claim and $1,000,000 Annual Aggregate for both the Contractor or any subcontractors when:

(i) Contract items 625 (excluding tunnel surveying), 629, or both are included in the Contract

(ii) Plans, specifications, and submittals are required to be signed and sealed by the Contractor's Professional Engineer, including but not limited to:

(A) Shop drawings and working drawings as described in subsection 105.02
(B) Mix Designs
(C) Contractor performed design work as required by the plans and specifications
(D) Change Orders
(E) Approved Value Engineering Change Proposals

(iii) The Contractor and any included subcontractor shall renew and maintain Professional Liability coverage for the liability exposure associated with Colorado law and the relevant statute of repose and limitations.

(5) The Contractor shall provide Umbrella or Excess Liability Insurance with minimum limits of $1,000,000 for work under this contract. Minimum limits shall be based upon estimated Construction Values in accordance with the table below. This policy shall become primary (drop down) in the event the primary Liability Policy limits are impaired or exhausted. The Policy shall be written on an Occurrence form and shall be following form of the primary. The Umbrella or Excess which will provide bodily injury, personal injury and property damage liability at least as broad as the primary coverage set forth above, including Employer's Liability, Commercial General Liability and Commercial Automobile Liability.

3
REVISION OF SECTION 107 – OCIP
RESPONSIBILITY FOR DAMAGE CLAIMS, INSURANCE TYPES AND COVERAGE LIMITS, OWNER CONTROLLED INSURANCE PROGRAM (OCIP) AND PROJECT INSURANCE MANUAL (PIM)

Estimated Construction Values	Minimum Umbrella / Excess Liability Limits
Less than $5,000,000 in CV	$1,000,000
$5,000,000 to $10,000,000	$2,000,000
$10,000,000 to $25,000,000	$5,000,000
$25,000,000 to $75,000,000	$10,000,000
Over $75,000,000	Determined by the CDOT Risk Manager

The Contractor shall ensure that their subcontractors provide Umbrella or Excess Liability Insurance with minimum limits of $1,000,000. This policy shall become primary (drop down) in the event the primary Liability Policy limits are impaired or exhausted. The Policy shall be written on an Occurrence form and shall be following form of the primary. The Umbrella or Excess which will provide bodily injury, personal injury and property damage liability at least as broad as the primary coverage set forth above, including Employer's Liability, Commercial General Liability and Commercial Automobile Liability.

(b) To CDOT, and any such entity where there is contractual liability entered in to by CDOT, the Contractor will provide evidence of such insurance, and each shall be named as an Additional Insured on the Commercial General Liability, Automobile Liability and Umbrella / Excess Liability Insurance policies. Completed operations additional insured coverage shall be on endorsements CG 2010 07/04, CG 2037 07/04, or equivalent. Coverage required of the contract will be primary over any insurance or self-insurance program carried by the State of Colorado, except where coverage is sponsored by CDOT for the Contractor.

(c) Railroad Protective Insurance
In addition to the above, the Contractor shall furnish evidence to CDOT that, with respect to the operation the Contractor or any of its subcontractors perform, the Contractor has provided for and on behalf of the Railroad Company, and each Railroad Company when more than one is involved, Railroad Protective Public Liability and Property Damage Insurance in limits as required by the Railroad Companies, but in no case less than a combined single limit of Two Million Dollars ($2,000,000) per occurrence with an aggregate limit of Six Million Dollars ($6,000,000) applying separately for each annual period for:

(i) All damages arising out of bodily injuries to or death of one or more persons.

(ii) All damages arising out of injury to or destruction of property.
Said policy or policies of insurance shall be deemed to comply with the Railroad Protective Insurance requirements if each of said policies contains a properly completed and executed "Railroad Protective Liability Form," copies of which are available from CDOT's Agreements Engineer, Colorado Department of Transportation, 2829 W. Howard Place, Suite 556, Denver, CO, 80204. All required policy or policies of insurance shall be submitted to the Project Director for transmittal to the Railroad Company's Insurance Department.

4
REVISION OF SECTION 107 – OCIP
RESPONSIBILITY FOR DAMAGE CLAIMS, INSURANCE TYPES AND COVERAGE LIMITS, OWNER CONTROLLED INSURANCE PROGRAM (OCIP) AND PROJECT INSURANCE MANUAL (PIM)

The Railroad Protective Insurance shall be carried until all Work required to be performed under the terms of the Contract is satisfactorily completed as evidenced by the formal acceptance of CDOT. The Railroad Company shall be furnished with the original of each policy carried on its behalf.

(d) Each insurance policy shall include provisions preventing cancellation or non-renewal without at least 30 days prior notice to Contractor. The Contractor shall forward to the Engineer any such notice received within seven days of the Contractor's receipt of such notice.

(e) The Contractor shall require all insurance policies in any way related to the contract and secured and maintained by the Contractor to include clauses stating that each carrier shall waive all rights of recovery, under subrogation or otherwise, against CDOT, its agencies, institutions, organizations, officers, agents, employees and volunteers.

(f) All policies evidencing the insurance lines of coverage required hereunder shall be issued by insurance companies satisfactory to CDOT.

A.M. Best Rating
All insurance companies providing policies obtained to satisfy the insurance requirements must have an A.M. Best rating of A-, VII or better.

(g) The Contractor shall provide certificates showing insurance coverage required by this contract to CDOT prior to execution of the contract. No later than 15 days prior to the expiration date of any such coverage, the Contractor shall deliver CDOT certificates of insurance evidencing renewals thereof. At any time during the term of this contract, CDOT may request in writing, and the Contractor shall thereupon within ten (10) days supply to CDOT, evidence satisfactory to CDOT of compliance with the provisions of this section.

(h) Notwithstanding subsection 107.15(a), if the Contractor is a "public entity" within the meaning of the Colorado Governmental Immunity Act CRS 24-10-101, et seq., as amended ("Act"), the Contractor shall at all times during the term of this contract maintain only such liability insurance, by commercial policy or self-insurance, as is necessary to meet its liabilities under the Act. Upon request by CDOT, the Contractor shall show proof of such insurance satisfactory to CDOT. Public entity Contractors are not required to name CDOT as an Additional Insured.

(i) When the Contractor requires a subcontractor to obtain insurance coverage, the types and minimum limits of this coverage may be different than those required, as stated above, for the Contractor, except for the Commercial General Liability and Automobile Liability and the subcontractor shall provide an Additional Insured endorsement for such coverage. Those that qualify as needing Professional Liability Insurance in terms of any design work shall provide such coverage as provided for in (4) above.

(j) CDOT will provide the following lines of Insurance coverage for this project in a CDOT sponsored Owner Controlled Insurance Program (OCIP):

5
REVISION OF SECTION 107 – OCIP
RESPONSIBILITY FOR DAMAGE CLAIMS, INSURANCE TYPES AND COVERAGE LIMITS, OWNER CONTROLLED INSURANCE PROGRAM (OCIP) AND PROJECT INSURANCE MANUAL (PIM)

INTRODUCTIONS / DEFINITIONS

Capitalized terms not otherwise defined in this Exhibit shall have the meanings assigned to them in the Contract.

Contractor: meaning the set forth in the first page of Book 1. Contractor refers to any person or entity awarded a Contract with CDOT to provide construction services for the Project.

Enrolled Contractor or Subcontractor: means the Contractor and any other Subcontractors enrolled in the OCIP as outlined in the Project Insurance Manual published by the CDOT Project OCIP Administrator.

Insurance Representative and Project OCIP Administrator: means the entity or individual designated by CDOT to represent its interest in the OCIP through the coordination of enrollment, claims and other OCIP activities, as well as monitoring for compliance to OCIP policies, procedures and guidelines.

Owner: means the Colorado Department of Transportation (CDOT), a body corporate and political subdivision of the State of Colorado.

Owner Controlled Insurance Program (OCIP): means an insurance delivery method that includes enrolled Contractors and Subcontractors on the Project in an Owner sponsored insurance program including Commercial General and Excess Liability, Contractors Pollution Liability, and Builders Risk Insurance, and such other coverage as the Owner may in writing specifically include in the OCIP.

Project Site: means the physical location of Work to be performed on the Project as described in the Contract, as well as areas adjacent to the Work necessary for performance of the Work as included in the OCIP.

Subcontractor: means any Person with whom the Contractor has entered into any Subcontract and any other Person with whom any Subcontractor has further subcontracted any part of the Work, at any tier, performing Work at the Project Site.

Work: means all activities required to be performed by Contractor, Project Contractors and their Subcontractors to fulfill their obligations under the Contract.

OWNER CONTROLLED INSURANCE PROGRAM (OCIP)

The Project will be subject to an Owner Controlled Insurance Program ("OCIP"). The Colorado Department of Transportation (CDOT) otherwise referred to as the “Owner”, acting directly or through its authorized designee will provide coverage for insurance under an OCIP.

6
REVISION OF SECTION 107 – OCIP
RESPONSIBILITY FOR DAMAGE CLAIMS, INSURANCE TYPES AND COVERAGE LIMITS, OWNER CONTROLLED INSURANCE PROGRAM (OCIP) AND PROJECT INSURANCE MANUAL (PIM)

Prior to commencement of the Work, Owner, at its sole cost, will secure and thereafter, except as otherwise provided herein, maintain at all times during the performance of this Contract, the insurance specified herein, with Owner, Contractor, Enrolled Project Contractors, and such other persons or interests as Owner may designate as insured parties, with limits not less than those specified below for each coverage.

Owner provided Insurance will apply only to Project Contractors who have completed the enrollment process, complied with the insurance requirements herein, and received notification of enrollment from the Project OCIP Administrator. Owner may require exclusion of any Subcontractor from the OCIP at the Owner's sole discretion. If a Subcontractor should be excluded from the OCIP at the Owner's discretion, then the cost of insurance may be equitably adjusted for the purchase separate insurance.

(1) Commercial General Liability- HG0001

Policy Limits:
$2,000,000 per Occurrence for Bodily Injury and Property Damage
$4,000,000 Per Project General Aggregate
$4,000,000 Per Project Products/Completed Operations Aggregate

The Policy limits are shared by all Project Contractors enrolled in the OCIP.

Standard Policy Exclusions – Examples could include, but are not limited to:

COVERAGE A BODILY INJURY AND PROPERTY DAMAGE LIABILITY
COVERAGE B PERSONAL AND ADVERTISING INJURY LIABILITY
COVERAGE C MEDICAL PAYMENTS

Additional Policy Endorsements and Exclusions:

Common Policy Declarations HM0010
Common Policy Conditions IL0017
Commercial General Liability Coverage Part – Declarations HS0002
Commercial General Liability Coverage Form HG0001
Consolidated Insurance Program Endorsement (Rolling Project) GH86xx (manuscript)
Unmanned Aircraft Coverage Endorsement GHxxxx (manuscript)
Loss Reimbursement Program Requirements HS 03 51
Commercial General Liability Schedule HC1210
Deductible Liability Insurance HS0328
Earlier Notice of Cancellation Or Nonrenewal Provided By Us HC2422
Absolute Lead Exclusion HC2137
Exclusion – Exterior Insulation and Finish System HC2193
Absolute Pollution Exclusion HC2123
Absolute Pollution Exclusion Exception For Building Heating Equipment HC2182
Absolute Pollution Exclusion Exception For Hostile Fire HC2126

7
REVISION OF SECTION 107 – OCIP
RESPONSIBILITY FOR DAMAGE CLAIMS, INSURANCE TYPES AND COVERAGE LIMITS, OWNER CONTROLLED INSURANCE PROGRAM (OCIP) AND PROJECT INSURANCE MANUAL (PIM)

Absolute Pollution Exclusion Exception For Mobile Equipment HC2183
Exclusion - Silica HG2102
Exclusion -Fungi, Bacteria, And Viruses HC2190
Residential Premise Exclusion HS2138
Nuclear Energy Liability Exclusion Endorsement IL0021
Important State Information Fraud Warning Statements HS9948
Installment Payment Plan HM9901
Premium Computation Endorsement HS9906
Amendments – Premium and Premium Audit HS2531
Quick Reference Commercial General Liability Coverage Part Occurrence HC7001
Listing of Coverage Parts and Endorsements Forming Part of this Policy HS 99 22
Producer Compensation G-3418
Recording and Distribution Of Material Or Information In Violation Of Law Exclusion HG0068
Trade Or Economic Sanctions Endorsement IH9941
U.S. Dept Of The Treasury, Office Of Foreign Assets Control ("OFAC") Advisory Notice To Policyholders IH9940
Disclosure Pursuant to Terrorism Risk Insurance Act (MO version - IH 09 56) IH 09 85
Cap of Losses From Certified Acts Terrorism HC 23 70

Standard Insurance Service Office Commercial General Liability Insurance policy or equivalent, including Bodily Injury, Property Damage, Personal Injury and Completed Operations covering operations at the Project Site for Project Contractors shall be provided. An eight-year extension of the Completed Operations Liability coverage for the Colorado Statute of Repose and the Statute of Limitations will begin upon the earlier of expiration of the OCIP policy, Substantial Completion of the Project, or the completion of Work under Contract. This insurance will not extend to products liability coverage for any product manufactured away from the Project Site. The OCIP will be primary and non-contributory as it relates to coverage provided under the OCIP.

Contractor will be responsible for repayment of any deductible for Bodily Injury or Property damage up to $10,000 per occurrence to the extent loss costs (including allocated loss adjustment expense) payable are attributable to its acts, or the acts of its subcontractors, or any other entity or person for whom it may be responsible, with no increase in the Contract amount.

To the extent losses covered and payable under the OCIP arise out of, or are the responsibility of the Contractor's subcontractors of any tier, Contractor may seek contribution from those subcontractors in an amount equal to the self-insured retention or deductible amount under the subcontractor's own conventional General Liability Insurance Policy in effect at the time of enrollment into the OCIP, but in no case may the Contractor collectively collect more than the per occurrence deductible of $10,000 for the occurrence which is the contractual responsibility of the Contractor.

8
REVISION OF SECTION 107 – OCIP
RESPONSIBILITY FOR DAMAGE CLAIMS, INSURANCE TYPES AND COVERAGE LIMITS, OWNER CONTROLLED INSURANCE PROGRAM (OCIP) AND PROJECT INSURANCE MANUAL (PIM)

The contractor shall estimate and report to CDOT the amount of money that would have been in their bid for Commercial General Liability Insurance on Form OCIP-S(1). The Contractor shall also show the amount of money remaining in their bid for Commercial General Liability for insuring items not included in the OCIP on Form OCIP-S(1).

(2) Umbrella or Excess Liability Insurance.

Policy limits:

$100,000,000	Each Occurrence
$100,000,000	Aggregate

Coverage is in excess of the primary Commercial General Liability and Employer's Liability. Such Excess Liability Insurance will be primary and non-contributory as to any other excess insurance the parties hereto may have in force. An eight-year extension (for the Statute of Repose and Limitations) of the Completed Operations Liability coverage is anticipated and will begin upon the earlier of expiration of the Commercial General Liability Policy or Substantial Completion of the Project, or the completion of Work under Contract. This insurance will not extend products liability coverage for any product manufactured away from the Project Site.

These limits may be satisfied in various combinations with an Umbrella or Excess policy.

The contractor shall estimate and report to CDOT the amount of money that would have been in their bid for Excess Liability Insurance on Forms OCIP-S(1) and OCIP-S(2). The Contractor shall also show the amount of money remaining in their bid for Excess Liability for insuring items not included in the OCIP on Form OCIP-S(2).

(3) Builders Risk Insurance.

CDOT will procure, pay for, and maintain a builder's risk insurance policy, including coverage for in-transit and off-site storage, to protect the interests of the Insured's, including CDOT, Project Contractors and its subcontractors, against the risk of loss or damage to the Work during construction at the Project Site. Such policy will include a waiver of subrogation in favor of CDOT, CDOT's Engineer, Construction Manager, Contractors, and subcontractors.

Coverage will include all materials, supplies and equipment that are intended for specific installation in the Project while such materials, supplies and equipment are located at the Project Site, in transit or while temporarily located away from the Project Site for the purpose of storage at the risk of one of the insured parties, as agreed upon by the CDOT in writing in advance of such transit or storage.

9
REVISION OF SECTION 107 – OCIP
RESPONSIBILITY FOR DAMAGE CLAIMS, INSURANCE TYPES AND COVERAGE LIMITS, OWNER CONTROLLED INSURANCE PROGRAM (OCIP) AND PROJECT INSURANCE MANUAL (PIM)

POLICY COVERAGE FORM AND EXCLUSIONS [EXAMPLES]:

Commercial Inland Marine – Builders Risk Coverage Form – ACE American Insurance Company

Endorsements:
- Extra Expense Endorsement
- Elite Property Enhancement: Builders Risk – sub limits apply
- Builders Risk Warranties

Exclusions:
- Government Action
- Nuclear Hazard
- War and Military Action
- Ordinance or Law
- Water – modified or deleted by endorsement
- Mold Exclusion
- Workmanship – Omission in, or faulty, inadequate or defective

Policy Coverage Extensions (sub limits may apply):
- Fire Department Service Charges
- Valuable Papers and Records
- Trees, Shrubs and Plants
- Debris Removal
- Pollutant Clean Up and Removal
- Flood
- Earth Movement

This insurance will not include any coverage for tools or clothing of workers, or any tools, equipment, protective fencing, scaffolding, and equipment owned, rented or used by Contractor and used in the performance of the Work, or work performed at off-site fabrication facilities. Contractor shall waive any such rights of recovery from CDOT and/or the OCIP Policies.

Contractor shall be responsible for repayment of any deductible for Property Damage up to $25,000 per occurrence to the extent loss costs (including allocated loss adjustment expense) payable are attributable to its acts, or the acts of its subcontractors, or any other entity or person for whom it may be responsible, with no increase in the Contract amount. Contractor may seek contribution from Subcontractor(s) responsible for the loss in an amount based on the contract value of the subcontractor represented below.

Total Contract Amount	Percent of deductible recovery
Subcontract value up to $499,999	0 recovery
Subcontract value $500,000 - $999,999	50% recovery
Subcontract value greater than $1,000,000	100% recovery

10
REVISION OF SECTION 107 – OCIP
RESPONSIBILITY FOR DAMAGE CLAIMS, INSURANCE TYPES AND COVERAGE LIMITS, OWNER CONTROLLED INSURANCE PROGRAM (OCIP) AND PROJECT INSURANCE MANUAL (PIM)

NOTE: The Builders Risk policy terms vary from policy to policy, and such insurance provided by the CDOT will be subject to such limits of liability, exclusions and deductibles as CDOT may negotiate in its discretion. Contractor is advised to consult the terms of the policy to ascertain its terms.

The Contractor shall not include in their bid amount insurance premiums for the primary coverage provided by CDOT for Builder's Risk Insurance as CDOT is providing this coverage.

(4) Contractor's Pollution Liability.

CDOT will procure, pay for and maintain Contractor's Pollution Liability insurance in the following limits:

$ 25,000,000	Per Claim
$ 25,000,000	Aggregate
	Claims Expenses (including Defense Costs) within limits.

Coverage will include Bodily Injury or Property Damage from a pollution event as defined within the policy form resulting from covered operations or completed operations of the Work performed at the Project Site.

Contractor shall be responsible for repayment of any deductible associated with the activities of the Contractor or their subcontractors up to $25,000 per occurrence to the extent loss costs (including allocated loss adjustment expense) payable are attributable to its acts, or the acts of its Project Contractors and subcontractors, or any other entity or person for whom it may be responsible, with no increase in the Contract amount. Contractor may seek contribution from Subcontractor(s) responsible for the loss in an amount based on the contract value of the subcontractor represented below.

Total Contract Amount	Percent of deductible recovery
Subcontract value up to $499,999	0 recovery
Subcontract value $500,000 - $999,999	50% recovery
Subcontract value greater than $1,000,000	100% recovery

The Contractor shall not include in their bid amount insurance premiums for the primary coverage provided by CDOT for Contractor's Pollution Liability Insurance as CDOT is providing this coverage.

(5) The OCIP and other insurance Contractor Obligations

(i) CDOT provided Insurance shall not apply to vendors, manufacturers, suppliers, material dealers, haulers and/or independent haulers, and others who merely transport, pick up, deliver or carry materials, personnel, parts or equipment, or any other items or persons to or from the Project Site. Subcontractors providing on site hauling services with dedicated payroll will be considered eligible for enrollment at CDOT's discretion.

11
REVISION OF SECTION 107 – OCIP
RESPONSIBILITY FOR DAMAGE CLAIMS, INSURANCE TYPES AND COVERAGE LIMITS, OWNER CONTROLLED INSURANCE PROGRAM (OCIP) AND PROJECT INSURANCE MANUAL (PIM)

(ii) The cost of the OCIP Insurance specified herein to be obtained by CDOT will be paid for by CDOT, and CDOT shall receive and pay, as the case may be, all adjustments in such costs, whether by way of dividends or audits, or otherwise. CDOT shall execute such instruments of assignment as may be necessary to permit CDOT to receive such adjustments and shall cause all Contractors covered by such insurance to do the same.

(iii) CDOT will review the estimates reported on Insurance Worksheet Summary, Form OCIP-S(2) and Insurance Worksheet Summary Form, OCIP – S(1) for money which has been removed from their bid amounts in Section 2. In the event CDOT's estimate of total insurance cost differs from the total provided on the worksheet by more than 15% CDOT and the Contractor shall determine the cause of the difference and make appropriate modification to the CAP (contract amount) prior to the award and start of work on the project. These amounts are subject to final audit at the close of the project, CDOT understands that there may be multiple changes throughout the course of the project.

(iv) The furnishing of insurance by CDOT shall in no way relieve, limit, or be construed to relieve Contractor or subcontractors of any responsibility or obligation whatsoever otherwise imposed by the Contract. CDOT assumes no obligation to provide insurance other than that specified herein. However, CDOT reserves the right to furnish additional insurance coverage of various types and limits.

(v) The Contractor shall furnish a copy of this Revision of Section 107 to all subcontractors of every tier.

(vi) Prior to commencement of operations at the Project Site, each Contractor shall complete a Contractor / subcontractor Application for enrollment into the OCIP and shall furnish and cause each of its subcontractors to furnish to the CDOT or its Insurance Representative estimates for the total construction values, and estimated WC Payrolls in connection with the Work. The Insurance Representative may request, and the Project Contractor shall comply with such request for copies of rate pages from their Workers Compensation, General and Excess Liability policies, or other insurance related information deemed necessary to effect and maintain coverage, and/or to assure that CDOT has received the appropriate reduction of the total insurance cost excluded from their Contract, including any markup thereon.

(vii) Failure to comply with any of the above items will be considered noncompliance with the Contract and may result in remedial action, including withholding of payment, and/or removal of Contractor and/or subcontractor from the Project Site.

(viii) Liability policies required of the Contractor and their subcontractors in this Revision of Section 107 shall, where prudently feasible, shall name CDOT and the Contractor and their elected and appointed officials, directors, officers, employees, agents, representatives, and any additional entities as CDOT or Contractor may request, as Additional Insured. The Additional Insured Endorsement, equivalent to ISO form CG2010 (07/04) and CG2037 (07/04) edition(s), shall state that the coverage provided to the Additional Insured is

primary and non-contributory with respect to any other insurance available to the Additional Insured. Contractor is responsible to ensure to the best of its ability that those entering the Project Site location have evidence of, or hold, the appropriate insurance or that those visitors are escorted while at the Project. Exceptions may be granted where mutually agreed to in advance between CDOT and the Contractor.

(ix) All policies of insurance required in this Revision of Section 107 shall be endorsed to provide that the insurance company shall provide written notice to CDOT at least 30 days prior to the effective date of any cancellation of such policies.

(x) All policies of insurance, as allowed by statute, that are in any way related to the Work, including those that are secured and maintained by consultants and subcontractors, shall include clauses providing that each underwriter shall waive all its rights of recovery under subrogation or otherwise, against CDOT, their Representative(s), Contractor and subcontractors.

(xi) Parties covered in this Revision of Section 107 shall cause to be furnished to CDOT and Contractor, or their Insurance Representative, certificates of insurance evidencing all insurance as required by this Contract. As and when CDOT or Contractor may direct, copies of the actual insurance policies or renewals or replacements thereof shall be submitted to CDOT or Contractor. All copies of policies, if any, and certificates of insurance submitted to CDOT shall be in form and content acceptable to CDOT or Contractor.

(xii) Nothing contained herein shall relieve Contractor, or its subcontractors of their obligations to exercise due care when performing any Work on the Project or to complete such Work in strict compliance with the Contract.

(xiii) By enrolling in the OCIP, the Contractor acknowledges that (A) the limits of OCIP provided insurance are shared by all insured parties under the OCIP for the Project, (B) CDOT and their affiliates of every tier disclaim any responsibility whatsoever for the availability, adequacy or exhaustion of the limits of the OCIP, the present or future solvency of any OCIP insurers, or any claims or disputes by, between, or among CDOT and any Contractor and any subcontractor, or any tier, and any of the OCIP insurance carriers.

(xiv) Any type of insurance or increase in limits not described herein which Contractor requires for its own protection or as a result of any applicable law shall be its own responsibility and expense.

(k) The Contractor and subcontractors are required to carry insurance coverages and limits listed below outside the OCIP which must be the same limits listed in (a) for the Contractor and for the subcontractor.

13
REVISION OF SECTION 107 – OCIP
RESPONSIBILITY FOR DAMAGE CLAIMS, INSURANCE TYPES AND COVERAGE LIMITS, OWNER CONTROLLED INSURANCE PROGRAM (OCIP) AND PROJECT INSURANCE MANUAL (PIM)

- Workers' Compensation
- Employer Liability
- Commercial General Liability - Off-site work and exposures
- Automobile Liability – at all times
- Umbrella or Excess Liability - Off-site work and exposures

All other insurance in Section (a) shall continue to be carried as required.

(l) CDOT will provide a Project Insurance Manual (PIM) that gives further detail on insurance and how to enroll in the OCIP. The PIM is hereby included in the Contract by reference.

(m) General Additional Safety Requirements. The Contractors and subcontractors shall within their own site-specific Safety Requirements or Manuals, ensure compliance has been met with the following Safety Requirements, which are incorporated in the Contract Documents:

The Contractor shall take all necessary precautions to protect the safety and health of the Project Site and is ultimately responsible to establish and maintain a written Contractor Safety Program (CSP) for the Work. The Contractor shall establish administrative and technical means for the mitigation of risk, response to incidents, and recovery/restoration to normal operations at the Project Site. The Program shall include development of a site safety culture which supports, "best practices" for accident prevention, job specific hazard recognition and planning, training, reporting, management oversight, and implementation.

All costs, penalties, and expenses of complying with the requirements of these Safety Requirements shall be included as part of the cost of the Contract. The Contractor shall notify CDOT promptly, in writing, if a charge of non-compliance has been filed against the Contractor, or any subcontractor, in connection with its performance of the Work.

The developed CSP shall apply in all phases of the Work. The objective of the program is to eliminate or control accident risks to personnel, associated management, subcontractors, equipment, facilities, general public, and environment. Required activities include hazard identification & analysis, planning, management, dedicated resources, auditing conformance, training, communicating results and documentation.

Additionally, clear and open partnering and communications relative to the safety program between the Contractor, subcontractors and CDOT's Representatives is a key component in effectively implementing and assuring conformance.

The Contractor is solely responsible for health and safety and shall perform the Work in a safe and environmentally acceptable manner; this includes all of its subcontractors.

14
REVISION OF SECTION 107 – OCIP
RESPONSIBILITY FOR DAMAGE CLAIMS, INSURANCE TYPES AND COVERAGE LIMITS, OWNER CONTROLLED INSURANCE PROGRAM (OCIP) AND PROJECT INSURANCE MANUAL (PIM)

(1) Safety Criteria

Notice of Correction of other unsafe conditions will be conveyed in writing within 24 hours after receiving written notice from CDOT or CDOT's Safety Representative of unsafe work. Lost time and lost productivity associated with this or any safety violation will be at the sole cost of the Contractor or the subcontractor without additional compensation.

(2) Contractor Site Safety Management

Each subcontractor is required to name an individual on its payroll as a Safety Representative (SR). These SRs are not required to be full-time safety representatives. The subcontractors are required to name an individual(s) who has the experience, ability and authorization to act on the subcontractor's behalf in matters of safety on the Project.

If at any time any subcontractor is performing one or more contracts and has fifty (50) or more employees on site for a period of two (2) consecutive workdays, including cumulative workdays under multiple contracts ("high employment"), such subcontractor shall have a full-time qualified safety representative on the job site to ensure the safety of its operations during the period of such high employment.

The Contractor shall administer any job-site safety recognition incentive program developed for the site in an effort to maintain a safety-conscious workforce at the site.

(3) OCIP Required Contractor Site Safety Requirements:

(i) The Contractor's Safety Program shall conform to all aspects of this Section and be consistent with the requirements herein and the CDOT Required Contractor's Safety Management Plan.

(ii) The Contractor shall conduct a project/site safety orientation for all Contractor & subcontractor employees prior to their working on the Project Site; including orientation for all full-time project oversight and management personnel. Upon completion of the orientation, a uniquely project identifiable hard-hat decal shall be provided to each worker.

The safety orientation (at a minimum) shall include the following:

(A) A description of the extent and nature of the Project.

(B) A description of any hazards that can typically be expected during the course of work, and means and methods for avoiding or protecting oneself.

(C) Required work practices, job conduct, and accident reporting procedures.

(D) Any other general information to acquaint the employee with special work and safety requirements at the Site.

15
REVISION OF SECTION 107 – OCIP
RESPONSIBILITY FOR DAMAGE CLAIMS, INSURANCE TYPES AND COVERAGE LIMITS, OWNER CONTROLLED INSURANCE PROGRAM (OCIP) AND PROJECT INSURANCE MANUAL (PIM)

(iii) The Contractors and subcontractors shall be prohibited from use and possession of alcoholic beverages, drugs (other than prescription), carrying weapons or ammunition onto the site, or using or carrying weapons while performing work on the Project's behalf, or attending Project sponsored activities. Contractor, at its own expense and with the approval of CDOT, shall adopt a policy of a drug free work site on the Project, which at a minimum shall include pre-employment, reasonable suspicion and post-accident drug testing. Contractor, at its discretion, may include "for cause" and "random" testing if consistent best practices are applied. Contractor shall require all subcontractors to maintain reasonable, similar drug testing policies and programs.

(iv) Current crane certification for each crane is required and must be on file at the jobsite.

(v) The Contractor's safety enforcement activities shall be documented and/or logged and provided to the CDOT's Safety Representative upon request (without any personnel privacy sensitive information) and this information shall be on file at the jobsite.

(vi) Include Personal Protective Equipment (PPE) requirements and policy.

(A) 100 percent fall protection at working surfaces above 6 feet without review and authorization from OCIP Safety Manager

(B) 100 percent eye protection with side shields required.

(C) 100 percent wearing of heavy-duty work boots/shoes required.

(D) 100 percent wearing of hardhats required.

(E) 100 percent wearing of shirt & long pants (no shorts).

(F) 100 percent wearing of high visibility vest or clothing.

(G) Hearing protection as required.

(4) OCIP Required Reporting

(i) Accident Reporting. The Contractor shall provide timely verbal notification and a written report to CDOT's Representative, and CDOT's Safety Representative of any and all accidents/incidents whatsoever arising out of or in connection with the performance of the work, whether on or adjacent to the site, which cause death, personal injury or property damage; and or had a serious potential for same. Verbal notification to the CDOT shall be immediate and under no circumstance shall notification exceed one hour from time of occurrence. Verbal notification shall include date and time, location, brief description, extent of property damage, and extent of injuries. A preliminary written accident report shall be furnished to the CDOT's Representative and CDOT's Safety Representative within 24 hours of the occurrence; final is due within 10 working days.

16
REVISION OF SECTION 107 – OCIP
RESPONSIBILITY FOR DAMAGE CLAIMS, INSURANCE TYPES AND COVERAGE LIMITS, OWNER CONTROLLED INSURANCE PROGRAM (OCIP) AND PROJECT INSURANCE MANUAL (PIM)

(ii) Monthly Accident/Incident Summary Reports. The Contractor shall provide a written Monthly Accident/Incident Safety Performance Summary Report for losses under their Contract to the CDOT within seven Days of the last day of the month. The report shall include the following minimum information:

(A) A summary, current year for all accidents/incidents that relate to the insurance lines covered by this OCIP – all Project Contractors / subcontractors.

(B) Summary of accident data by Contractor and subcontractor.

(C) Summary of Property Damage, including Utility Damage incidents.

(D) Status update of any project required corrective actions.

(5) OCIP Required Contractor Safety Management Plans / Documents

(i) Job Task Hazard Analysis Program.

All work activities shall have a written job/task/activity Hazard Analysis (HA) associated with it appropriate for the hazards, scope, and/or complexity of the work. At a minimum this HA will cover the steps, hazards, and mitigation, required to perform the work safely.

(ii) Project Hazard Communication Plan

(iii) Project Utility Management Plan, locates, accidental damage prevention, and incident reporting/correcting, policies, procedures, and practices.

The Contractor shall have an adequate utility locate, protect, and emergency response program. Any utility strike will be reported to CDOT immediately, investigation and lessons learned follow-up reporting performed, and related program performance measures provided. In addition, no corrections and/or repairs will be re-covered or otherwise made inaccessible until CDOT's Representative or designee has had the opportunity to review.

(iv) Project Water Intrusion Prevention and Mitigation Program

(v) Project Emergency Response Plan

(vi) Project Security Plan

Special consideration and concern shall be given to the storage/protection of highly valuable (i.e., copper), finished product and/or critical materials/equipment to be protected from theft and/or vandalism.

17
REVISION OF SECTION 107 – OCIP
RESPONSIBILITY FOR DAMAGE CLAIMS, INSURANCE TYPES AND COVERAGE LIMITS, OWNER CONTROLLED INSURANCE PROGRAM (OCIP) AND PROJECT INSURANCE MANUAL (PIM)

Colorado Department of Transportation (CDOT)
I-25 North Express Lanes Project

Insurance Calculation Worksheet
OCIP-S(1)

Your Company Name: _____

Your Company was hired by: _____

% Self-Performed Work: _____ Contract Amount: $_____

I. Primary General Liability

Labor Classification	GL Class Code	Estimated Payroll or Contract Value	GL Rate	Premium

Note: Identify General Liability loss rate per $100/$1,000 of payroll or receipts within the policy deductible _____

Total General Liability Premium (A): $_____

II. Excess/Umbrella Liability*

Estimated Payroll or Contract Value	Umbrella Rate	Premium

Total Umbrella Liability Premium (B): $_____

* If Excess/Umbrella Liability premium is flat-charge, develop rate by dividing your excess policy annual premium by estimated annual payroll. Apply this rate to the estimated payroll for this project. If annual rate is not provided a minimum deduct of 15% of the primary General Liability rate will be applied.

III. Profit Overhead and Contingency **_____% of Premium (C): $_____**

IV. Total Initial Insurance Deduct **Total Lines of Insurance (A+B+C): $_____**

_____ _____ _____

Broker/Agency Name **Broker Signature** **Date**

***Policy rate pages must be submitted with this worksheet.**
THERE WILL BE NO EXCEPTIONS.

18
REVISION OF SECTION 107 – OCIP
RESPONSIBILITY FOR DAMAGE CLAIMS, INSURANCE TYPES AND COVERAGE LIMITS, OWNER CONTROLLED INSURANCE PROGRAM (OCIP) AND PROJECT INSURANCE MANUAL (PIM)

DOT
DEPARTMENT OF TRANSPORTATION

COLORADO DEPARTMENT OF TRANSPORATION
BR _____, Sub Account _____

Insurance Worksheet Summary
Form OCIP - S(2)

Contractor Name	Proposal Price	Construction Value (CV) within the Proposal Price	Payroll Estimate	% of Payroll to CV	Line of Coverage	Gross Insurance Amount herein identified in the Proposal (A)	Insurance Calculation Worksheet (Y/N)	GL/Excess Rate Basis Indicator (Payroll or CV)	GL / Excess Rate Basis (% of Rate Basis)	OCIP Insurance Calculation (B)	Contract Insurance Line Item - Proposal Price Net of OCIP Insurance (A-B)	Notes
CONTRACTOR / JV PARTNERS								(Payroll / CV)				
					Commercial General Liability							
					Excess (Umbrella) Liability							
TOTAL CONTRACTOR / JV CREDITS												

Instructions:

1. Contract Value (CV) - Total Proposal Price, Net of OCIP Insurance - excluding coverage being provided by the Owner as provided for in the OCIP in Section 2.1 / 2.2 of Exhibit F - Insurance.
2. Payroll Estimate - Estimate of Payroll for self-performed work of the Contractor (WC Payroll Estimate).
3. % of Payroll Estimate to CV.
4. **Gross Insurance Amount (A)**- Total Project Insurance Amount for the Contractor based upon the Exhibit F, Section 1.0 (prior to removal of insurance under the OCIP)
5. Insurance Calculation Worksheet - An Insurance Calculation Worksheet must be provided for the Contractor, including a separate worksheet for each where there are JV Partners
6. GL/Excess Rate Basis Indicator
7. GL / Excess Rate Basis - % of the blended Rate for GL / Excess based upon the Policy Rate Basis. Example (Rate Per $1000 of CV)
8. **OCIP Insurance Calculation (B)** - Amount of Insurance removed for the Contractor from your Proposal Price based upon Sections 2.1 / 2.2 of Exhibit F - Insurance
9. **Contract Insurance Line Item - Proposal Price Net of OCIP Insurance (A-B)** - Represents the insurance cost remaining in the Proposal Price for the Contractor based upon Sections 2.3 / 2.4 of Exhibit F - Insurance

Assistance for Calculation of Insurance:

b. **General Liability:** Multiply your classification rate times per $1,000 of payroll or construction value.
c. **Excess Liability:** If Excess Liability is a flat charge, develop rate by dividing your Excess policy annual premium by estimated annual payroll. Apply this rate to the estimated payroll or CV for this project.

***The Contractor must provide this Insurance Worksheet Summary, OCIP- S (2), and Insurance Calculation Worksheets - Form OCIP - S(1) for their insurance, including separate worksheets for any JV Partners.**
***The Contractor need not include Insurance Calculation Worksheets, nor summarize herein, insurance estimates of Subcontractors.**
*** The Contractor and their Subcontractors must provide Proposal Prices which are Net of the OCIP provided Insurance as provided for in Exhibit F - Insurance, Section 2 - CDOT OCIP Requirements.**

1
REVISION OF SECTION 109
CMGC OVERRUN POOL

Section 109 of the Standard Specifications is hereby revised for this project as follows:

Delete subsection 109.03 and replace with the following:

109.03 Compensation for Altered Quantities.

a) *Construction Agreed Price.* On CMGC Construction projects, when the accepted quantities of work vary from the quantities in the Contract, The Contractor shall accept as payment in full, payment at the original contract unit prices for the installed and accepted quantities of work up to the original quantities shown in the Construction Agreed Price proposal, except as defined in subsections 104.02, 104.03, and 108.11 as approved by the Engineer. All planned Force Account items will be paid for in accordance with subsections 104.03 as listed in the Project Special Provision, Force Account Items. Overruns directed by the Engineer on original quantities as accepted in the Construction Agreed Price proposal shall be paid for under the existing line item and will be reconciled against the CMGC Overrun Pool item.

Insert overrunnable items here after Quantity Reconcilation discussion.

2
REVISION OF SECTION 109
CMGC OVERRUN POOL

If items and their original quantities shown in the Construction Agreed Price proposal change or are modified by the Department between acceptance of the CAP proposal and issuance of the final construction plans and specifications, the Contractor shall accept as payment in full at the original contract unit prices for the quantities that have changed.

Allowance will not be made except as provided in subsections 104.02, 104.03, and 108.11, for any increased expense, loss of expected reimbursement, or loss of anticipated profits suffered or claimed by the Contractor resulting either directly from such alterations or indirectly from unbalanced allocation of overhead expense among the contract items or from any other cause.

Delete subsection 109.04 and replace with the following:

109.04 Compensation for Changes and Force Account Work.

Overruns on all bid items and quantities that are allowed to be overrun as defined in subsection 109.03 will be paid for using the CMGC Overrun Pool. All bid items and quantities that will be paid for using the CMGC Overrun Pool will be as described in the Project Risk Register, including definitions and identify how to determine when and how to measure payment for the risk item.

Force account work shall not be eligible for the CMGC Management Price Percentage.

a) *Labor*. For all labor and foremen in direct charge of the specific operations, the Contractor will receive the actual rate of wage normally paid for each and every hour that the labor and foremen are actually engaged in the work, as documented by certified payrolls

The Contractor shall receive the actual costs paid to, or in behalf of, workers by reason of subsistence and travel allowances, health and welfare benefits, pension fund benefits, or other benefits, when the amounts are required by a collective bargaining agreement or other employment contract or generally applicable to the classes of labor employed on the work. An amount equal to 67 percent of the actual wages and fringe benefits paid directly to the employees will also be paid to the Contractor. This 67 percent will not be applied to subsistence, travel allowance, or to fringe benefits paid to a third party or a trustee. The CMGC Management Price Percentage as specified in the Contract will not be added to labor costs

b) *Materials.* For materials accepted by the Engineer and incorporated in the work, the Contractor shall receive the actual cost of such materials, including transportation charges paid (exclusive of equipment rentals as hereinafter set forth) to which the CMGC Management Price Percentage will be added. For materials provided by a subcontractor, accepted by the Engineer and incorporated in the work; the Contractor shall receive the actual cost of such materials, including transportation charges paid (exclusive of equipment rentalsas hereinafter set forth), to which 15% will be added.

3
REVISION OF SECTION 109
CMGC OVERRUN POOL

c) *Owned or Leased Equipment.* For the use of any machinery or equipment, approved by the Engineer, which is owned or leased directly by the Contractor or subcontractors, or by entities that are divisions, affiliates, subsidiaries or in any other way related to the Contractor or subcontractors or their parent companies, the Contractor will be paid in the manner hereinafter specified. Rental rates will be from the current edition of the Rental Rate Blue Book of Rental Rates for Construction Equipment and will be used as follows:

1. Determination of the rental rate to be used will be as follows:
   Hourly rate: RR = (ADJ BB/176) (RF) +EOC
   Standby rate: SR = (ADJ BB/176) (RF) (0.5)
   Where: RR = Hourly rental rate
   SR = Standby rate
   ADJ BB = Blue Book Monthly Rate adjusted for year of manufacture
   RF = Regional Factor of 1.06
   EOC = Estimated Hourly Operating Costs from Blue Book

2. The number of hours to be paid for will be the number of hours that the equipment is actually used on a specific force account activity.

3. Overtime shall be compensated at the same rate indicated in subsection 109.04 (c) 1. above.

4. The EOC will be used for each hour that the equipment is in operation on the force account work. Such costs do not apply to idle time regardless of the cause.

5. Idle time for equipment will not be paid for, except where the equipment has been held on the Project site on a standby basis at the direction of the Engineer. Such payment will be made at the standby rate established in subsection 109.04 (b) 1.

6. Incurrence of costs for standby rates for equipment shall not take place until approval has been received from the Engineer. Payment for standby time will not be made on any day the equipment Incurrence of costs for standby rates for equipment shall not take place until approval has been received from the Engineer. Payment for standby time will not be made on any day the equipment operates for eight or more hours. For equipment accumulating less than eight hours operating time on any normal work day standby payment will be limited to only that number of hours that, when added to the operating time for that day, equals eight hours. Additionally, payment for standby time will not be made in any consecutive 30 day period that the equipment operates for 176 or more hours. For equipment accumulating less than 176 hours operating time in any consecutive 30 day period, standby payment will be limited to only that number of hours that, when added to the operating time for that consecutive 30 day period, equals 176 hours. Standby payment will not be made in any case on days not normally a work day.

7. The rates established above shall include the cost of fuel, oil, lubrication, supplies, incidental tools valued at less than $500, necessary attachments, repairs, overhaul and maintenance of any kind, depreciation, storage, overhead, profit, insurance, all costs (including labor and equipment) of moving equipment onto and away from the site, and all incidentals, except as allowed in subsection 109.04(c)8.

4
REVISION OF SECTION 109
CMGC OVERRUN POOL

8. The rental rate for small tools shall be $2.00 per hour. Small tools are defined as any tool which would be valued between $500 and $2,000 if purchased new.
9. Transportation charges for each piece of equipment to and from the site of the work will be paid provided:
    1. The equipment is obtained from the nearest source,
    2. Charges are restricted to those units of equipment not already available or required on the Project, and
    3. The equipment is used solely for the force account work.
10. Fast use expendable parts not included in the Rental Rate Blue Book will be paid at certified invoice cost to which the CMGC Management Price Percentage will be added. Such parts not totally expended on the force account work will be prorated based on actual use.
11. Payable time periods will not include:
    1. Time elapsed while equipment is broken down
    2. Time spent in repairing equipment
    3. Time elapsed after the equipment is no longer needed.

If a piece of equipment that is not in the Blue Book is needed, rates shall be agreed to in writing before the equipment is used.

d) *Rental Equipment.* Use of rental equipment not owned or leased by the Contractor or subcontractors will be paid for by certified invoice cost to which the CMGC Management Price Percentage will be added. The EOC will also be paid if not included in the rental rate. The use of and rates for rental equipment shall be approved by the Engineer prior to use. Proration of rental rates to an hourly rate for equipment not used solely for the force account shall be based on 176 hours per month, 40 hours per week or 8 hours per day as applicable. The cost of moving the rental equipment onto and away from the job will also be paid when the equipment is used solely for the force account work. For work performed by a subcontractor, an amount equal to ten percent of the total due to the Contractor for rental equipment cost will be added to compensate the Contractor for related overhead costs.

e) *Administrative Compensation.* Administrative compensation will be paid to the Contractor for work performed on a force account basis by a subcontractor, utility, railroad, waste disposal company, or specialty firm. The compensation will be a percentage of the value of the force account work performed in accordance with the following:

To $1,000	10%
Over $1,000 to $10,000	$100 plus 5% of excess over $1,000
Over $10,000	$550 plus 3% of excess over $10,000

The percentages will be calculated after certified invoices are furnished by the Contractor. Compensation for administrative loading expenses will be applied to each individual billing for each force account, not to exceed one administrative loading per billing nor one billing per force account per month.

5
REVISION OF SECTION 109
CMGC OVERRUN POOL

f) *Records.* The Contractor's representative and the Engineer shall, on a daily basis, agree in writing on the quantities of labor, equipment and materials used for work completed on a force account basis.

g) *Statements.* Payment will not be made for work performed on a force account basis until the Contractor has furnished the Engineer with triplicate itemized statements of the cost of the force account work, detailed as follows:
(1) Labor classification, hours, rate, and extension for each labor class or pay rate within a class.
(2) Equipment type, hours, rate and extension for each unit of equipment.
(3) Quantities of materials, prices, extensions and transportation charges.
(4) Administrative compensation when applicable.
Statements shall be accompanied and supported by certified invoices for all materials and rental equipment including transportation charges. If materials used on the force account work are not specifically purchased for the work, but are taken from the Contractor's stock, the Contractor shall furnish a written statement certifying that the materials were taken from stock, that the quantity claimed was actually used, and that the price and transportation claimed represent the actual cost to the Contractor.

h) *Alternative Method of Documenting Force Account Work*. The following method of documenting the amount of force account work done may be used in lieu of the method described in subsections 109.04 (f) and (g) above, when agreed to by both the Engineer and the Contractor.
The Engineer will keep a daily record of the labor, equipment and material used on approved force account work. The Contractor's representative shall review and initial the record each day to ensure that the record is accurate and complete, and that the costs were actually incurred.

The Contractor shall furnish certified copies of invoices for the cost of all materials used including transportation charges. If materials used on force account work are not specifically purchased for the work, but are taken from the Contractor's stock, the Contractor shall furnish a written statement certifying that the quantity claimed was actually used, and that the price and transportation charges claimed represent the actual cost to the Contractor.

The Engineer will calculate the cost of the force account work each month and include payment on the monthly progress estimate.

i) Contract modification orders that change the scope of work outside the accepted CAP documents will include the direct cost of the work and include the CMGC Management Price Percentage as specified in the contract.

j) The CMGC Management Price Percentage stated in (a) through (i) above constitute full compensation for all items of expense not specifically designated, including general superintendence, use of incidental tools, field and office overhead, and profit. The total payment made as provided above shall constitute full compensation for such work.

1
REVISION OF SECTION 206
SHORING

Section 206 of the Standard Specifications is hereby revised for this project as follows:

Subsection 206.08 shall include the following:

This work consists of providing shoring for various construction activities during the course of this project as shown on the plans.

Subsection 206.09 shall include the following:

Shoring is defined as any temporary construction used to support the earth adjacent to any excavation or embankment, or temporary construction used to support construction, traffic or pedestrian loads on a structure during construction.

This work shall consist of shoring at various structure locations throughout the project site and as needed.

Shoring drawings shall be provided by the Contractor to the Engineer for information only. The drawings shall be prepared by, and contain the seal and signature of, a Professional Engineer registered in the State of Colorado. These drawings shall be approved and signed by the Contractor and provided to the Engineer at least ten days prior to construction.

Shoring shall be constructed in conformity with the shoring drawings provided to the Engineer. Prior to placing construction or traffic loads on the supported earth or structure, the Contractor's Professional Engineer shall certify in writing that shoring materials and construction have been inspected and that all shoring, materials, and construction are in conformity with the shoring drawings. The Contractor shall supply a copy of the certification to the Engineer for record purposes.

If embankment, construction, traffic, or other surcharge in excess of the original shoring design is to be placed adjacent to any shoring, the Contractor shall provide a sealed and signed letter from the Contractor's Professional Engineer prior to the load placement stating that the shoring will support the additional load.

The shoring plans shall detail a daily monitoring method for all shoring. The monitoring method shall include both lateral and vertical movements. The shoring plans shall detail each monitoring location required to protect all surrounding structures.

Upon completion of each phase of construction, the temporary shoring shall be removed to a depth of at least 2’ below the bottom of the pavement section.

2
REVISION OF SECTION 206
SHORING

Subsection 206.10 shall include the following:

Shoring will not be measured, but will be paid for each area listed below, as designated on the plans, on a lump sum basis as follows:

Area 23: Shoring required for construction of the Southwest Monument Wall and lower wall at (Structure C-17-FX).

Area 24: Shoring required for construction of the Northwest Monument Wall and lower wall at (Structure C-17-FXA).

Area 25: Shoring required for construction of the Northeast Monument Wall and lower wall at (Structure C-17-FXA).

Area 26: Shoring required for construction of the Southeast Monument Wall and lower wall at (Structure C-17-FX).

Subsection 206.11 shall include the following:

Payment will be made under:

Pay Item	**Pay Unit**
Shoring (Area 23)	Lump Sum
Shoring (Area 24)	Lump Sum
Shoring (Area 25)	Lump Sum
Shoring (Area 26)	Lump Sum

Payment for shoring will be full compensation for all work and materials required to design, construct, maintain the excavation and remove the shoring.

Payment will not be made for any area where Shoring is not utilized for the purpose as shown in the plans or where shoring is not necessary per OSHA requirements. Payment for additional shoring required as a result of the Contractors operations or phasing will not be measured and paid for separately, but shall be included in the cost of the work. Concrete Barrier (Temporary) shall not be considered shoring and if used, will not be paid for.

1
REVISION OF SECTION 212
SEEDING, FERTILIZING, SOIL CONDITIONER AND SODDING

Section 212 of the Standard Specifications is hereby revised for this project as follows:

DESCRIPTION

Section 212.01 shall be revised to read as follows:

This work consists of soil preparation, application of fertilizer, and furnishing and placing seed. The work shall be in accordance with the Contract and accepted horticultural practices.

MATERIALS

Subsection 212.02, 2nd Paragraph shall be revised to read as follows

Seed types and amount of PLS required per acre shall be provided in accordance with the drawings.

CONSTRUCTION REQUIREMENTS

Subsection 212.06 shall be revised to include the following:

(b) *Fertilizing and Soil Conditioning* – Fertilizer and supplemental compost are not required.

Examination. Verify rough grading is within one-tenth of a foot. Verify site is free from obstructions, objects, or structures that are not a part of the final site construction. Verify major drainages are completed and in place. Do not start work until the site is acceptable. Once landscape grading has commenced, the Landscape Contractor shall be responsible for bringing the grading to final line and grade and creating positive drainage.

Clearing. Prior to soil preparation, existing vegetation not to remain and which might interfere with the specified soil preparation shall be cleared, grubbed, raked, and the debris removed from the site. Prior to or during grading or tillage operations the ground surface shall be cleared of materials which might hinder final operations.

Protection. Field locate buried cables, wires, electrical service, irrigation lines and other subsurface element that may be damaged during ripping operations. Stake and/or paint locations with an easily visible system that will enable equipment operators to avoid damaging buried utilities.

Roundup (glyphosate) Application. Apply to areas to be seeded a minimum of two (2) weeks prior to seeding. Apply Roundup only when weeds are growing vigorously. Apply at manufacturers maximum recommended rate.

Seeding Application. Drill seed 0.25 inch to 0.5 inch into the soil. In areas that are not accessible to a drill, hand broadcast at triple the above rate and rake 0.25 inch to 0.5 inch into the soil.

Special Requirements. Hydromulching and/or hydroseeding will not be allowed.

2
REVISION OF SECTION 212
SEEDING, FERTILIZING, SOIL CONDITIONER AND SODDING

Hay or Straw Mulching. After seeding has been completed or when required for erosion control, weed free hay or straw shall be uniformly applied, with no bare soil showing. Application rate shall be 2 tons per acre. It shall be crimped in with a crimper or other approved equipment. The Engineer may order hand-crimping on areas where mechanical methods cannot be used. The seeded area shall be mulched and crimped within four hours after seeding. Areas not mulched and crimped within four hours after seeding or prior to precipitation or damaging winds on site shall be reseeded with the specified seed mix at the Contractor's expense, prior to mulching and crimping.

Reseeding Operations/Corrective Stabilization. Seeded areas shall be reviewed by the Owner's Representative for bare soils caused by surface or wind erosion. Bare areas shall be regraded, seeded, mulched and have mulch tackifier (or blanket) applied as necessary, at no additional cost to the project. The Contractor shall maintain seeded areas, mow to control weeds or apply herbicide to control weeds in the seeded areas until Final Acceptance.

METHOD OF MEASUREMENT

Subsection 212.07 shall be revised as follows:

Delete paragraphs 2 and 3.

Roundup *(glyphosate)* Application will not be measured, but shall be incidental to the work.

BASIS OF PAYMENT

Subsection 212.08 shall be revised as follows:

Payment will be made under:

Pay Item	**Pay Unit**
Seeding (Native) Drill (Type 1)	Acre
Seeding (Native) Drill (Type 2)	Acre

Finish grading, utility locates, Roundup *(glyphosate)* and mulch application will not be measured and paid for separately, but shall be included in the work.

1
REVISION OF SECTION 213
MULCHING

Section 213 of the Standard Specifications is hereby revised for this project as follows:

DESCRIPTION

Subsection 213.01

Add to the description as follows:

This work also consists of furnishing and placing wood (organic) mulch; concrete landscape borders, metal landscape borders, and landscape weed barrier fabric.

MATERIALS

Subsection 213.02

Wood (Organic) Mulch. Delete the "wood chip mulch" specified and replace with the following:

Wood (Organic) Mulch: "Choice Natural", as supplied by Hageman Earth Cycle, 970.221.7173, four inch (4") depth (minimum) – no weed barrier required.

Contractor shall purchase Wood (Organic) Mulch from supplier. Contractor shall submit samples of Wood (Organic) Mulch for approval by Owner or Owner Representative prior to purchasing and installing mulch.

Metal Landscape Border. Delete the "Metal Landscape Border" specified and replace with the following:

Metal Landscape Border (1/8 x 4 inch). Contractor to provide commercial-steel header, rounded top edge, fabricated in sections of standard lengths, with loops stamped from or welded to face of sections to receive stakes as follows:

Manufacturers: COL-MET Commercial Grade Steel Edging (1101), DuraEdge, OR approved equivalent.
Edger Size: 1/8" thick by 4 inches
Stakes: Tapered steel, a minimum of twelve inches (12").
Accessories: Standard tapered ends, corners, and splicers.
Finish: Standard paint – Green.

Add to this sub-section as follows:

Landscape Weed Barrier Fabric. Materials for weed barrier shall be a non-woven geotextile material suitable for this purpose such as Mirafi 140, Typar 3341, or Polyspun 300 or approved equivalent. Submit brand name and model number/name of proposed weed barrier to be used.

Contractor shall submit samples of wood (organic) mulch and weed barrier fabric for approval by Owner or Owner Representative prior to installation.

Concrete used to construct the concrete landscape border shall be Class B, per Section 601.

2
REVISION OF SECTION 213
MULCHING

CONSTRUCTION REQUIREMENTS

Subsection 213.03

Delete subsection (e) Metal Landscape Border and replace with the following:

Install by laying out beds scaled from the plans. Stake, flag, or paint proposed beds prior to installation of edging and obtain approval by Owner's Representative of layout prior to installation. Install header plumb with grade and stake at minimum ten (10) foot intervals. Establish top of header one inch (1") above finish grade in turf areas. Install using straight lines or long smooth curves. Provide v-shaped drainage openings two inches (2”) wide and one inch (1”) depth at low points in the bed, at outlet point for drainage appurtenances such as downspouts including overflow drains and at ten (10) foot intervals maximum. Do not install steel landscape edger around mulch rings in lawn areas.

Add (i) Landscape Weed Barrier Fabric as follows:

Prior to placing mulch and planting in mulch beds, apply Roundup brand herbicide to weeds and allow beds to sit for seven (7) days.

Prior to placing inorganic mulch, install landscape weed barrier fabric according to manufacturer's written instructions. Completely cover area to be rock mulched (or as described on the Drawings) overlapping fabric edges a minimum of six-inches (6”). Seams and edges of fabric shall be pinned at 12” min intervals.

Add (l) Concrete Landscape Border.

Concrete landscape border shall be installed along the lines and at the grades shown on the plans by an approved method that will not damage the border. Dimensions shall be as shown on the plans.

METHOD OF MEASUREMENT

Subsection 213.04

The quantity of Wood (Organic) Mulch will not be measured separately, but will be incidental to the placement of trees.

The quantity of Landscape Weed Barrier Fabric will not be measured separately, but will be incidental to the cost of the planter boxes.

Base Bid includes Concrete Landscape Borders. Concrete landscape border will be measured by the linear foot of completed and accepted concrete border and paid for as Concrete Landscape Mow Band. Reinforcing steel used in the Concrete Landscape Border will not be measured, but shall be included in the work.

Bid Alternate includes Metal Landscape Borders. Metal landscape border will be measured by the linear foot of completed and accepted metal landscape border.

3
REVISION OF SECTION 213
MULCHING

BASIS OF PAYMENT

Subsection 213.05. Add the following line items to the Pay Schedule as follows:

Payment will be made under:

Pay Item:	**Pay Unit**
Base Bid:	
Concrete Landscape Mow Band	Linear Foot
Bid Alternate:	
Metal Landscape Border (1/8 x 4 inch)	Linear Foot

Reinforcing Steel used in the Concrete Landscape Border shall not be paid for separately, but shall be included in the cost of the work.

1
REVISION OF SECTION 214
PLANTING

Section 214 of the Standard Specifications is hereby revised for this project as follows:

DESCRIPTION

Subsection 214.01 shall include the following:

See Section 213 for wood mulch, inorganic mulch and weed barrier fabric.

MATERIALS

Subsection 214.02 shall include the following:

Plant List. A plant list is provided on the plans. Quantities shown on the list are for information only. Contractor shall be responsible for verifying quantity takeoffs as shown on the drawings. In the event of a discrepancy between quantities shown on the plant list and quantities depicted on the plans, the quantities depicted on the plans shall govern.

Guying and Staking. Material includes 14 AWG wire with 1/2" x 12" PVC sleeves and stake protection cap per each stake.

CONSTRUCTION REQUIRMENTS

Subsection 214.04

Landscape Establishment.

The duration of the Landscape Establishment period shall be from initial installation thru final acceptance. Subsequent maintenance and warranty replacements shall be the City's responsibility following final acceptance for the entire/completed project. The contractor shall NOT be responsible for warranty requirements on the irrigation or landscaping following final acceptance.

After planting on the project is complete, a plant inspection shall be held including the Contractor, Engineer, and the Landscape Architect to determine acceptability of plant material. During inspection, an inventory of rejected, dead or dying material will be made, and corrective and necessary cleanup / replacement measures will be determined.

From the time of installation, during construction, and throughout the Landscape Establishment Period, the Contractor shall maintain plant material, and seeded areas in a healthy and vigorous growing condition, and ensure the successful establishment of vegetation.

During the Landscape Establishment Period, the Contractor shall water, cultivate, prune the plants, repair, repair or adjust guying and staking material. The Contractor shall also remove weeds from planting beds and tree area saucers monthly, and maintain specified depths of mulching material.

2
REVISION OF SECTION 214
PLANTING

It is anticipated that this project will be constructed in stages. The Contractor will be required to maintain the "completed" landscape areas fully, until the remaining landscape areas are deemed complete by the City, when the project's Notice of Final Acceptance letter is issued.

Dead, dying or rejected material shall be removed each month during the Landscape Establishment Period as directed by the City's Project Manager. Plant replacement shall be performed during the spring planting season or at the beginning and end of the Landscape Establishment Period. Plant replacement stock shall be planted in accordance with the original contract specifications and is subject to all requirements specified for the original material. Plant replacement shall be at the Contractor's expense.

Work performed associated with landscape establishment will not be measured separately but shall be considered incidental to the work.

Subsection 214.04

Delete Section (b), (1) Watering in Irrigated areas and replace with the following:

The trees planted by the Contractor shall be watered minimally twice per month at the rate of twenty (20) gallons per tree per watering for the months May through October during the Landscape Establishment Period, or as needed, and the trees shall also be watered once per month at the rate of twenty (20) gallons per tree for the months November through April during the Landscape Establishment Period, or as needed.

The shrubs, grasses and perennials planted by the Contractor shall be watered minimally twice per month at the rate of two (2) gallons per shrub per watering event for the months May through October during the Landscape Establishment Period, or as needed, and the shrubs, grasses and perennials shall also be watered once per month at the rate of two (2) gallons per plant for the months November through April during the Landscape Establishment Period, or as needed.

METHOD OF MEASUREMENT

Subsection 214.05 shall include the following:

The accepted quantities will be paid for at the contract unit price for each of the pay items listed below that appear in the bid schedule. Except as otherwise indicated on the plans or in the special provisions, all excavation, soil material for tree, shrub, ornamental grass and perennial backfill mix, tree guying and staking materials, protective caps, and other items necessary to complete the work as shown on the plans will not be paid for separately but shall be included in the work.

BASIS OF PAYMENT

Subsection 214.06 shall include the following:

Pay Item	**Pay Unit**
Deciduous Tree (2 Inch Caliper)	Each

REVISION OF SECTION 214
LANDSCAPE MAINTENANCE (12 MONTH)

Section 214 of the Standard Specifications is hereby revised for this project as follows:

Subsection 214.01 shall include the following:

214.01 Description. When a provision of Section 214 or an order by the Engineer requires that an action be immediate or taken immediately, it shall be understood that the Contractor shall at once begin affecting completion of the action and pursue it to completion in a manner acceptable to the Engineer.

Delete the first two paragraphs of Subsection 214.04 and replace with the following:

214.04 Landscape Establishment. From the time of installation, during construction, and throughout the Landscape Establishment period the Contractor shall maintain all plant material, trees, and seeded areas in a healthy and vigorous growing condition and ensure the successful establishment of vegetation. This includes performing establishment, replacement work, and landscape maintenance work as described below.

The beginning of the Landscape Establishment period, for each construction package, depends upon receipt of the written Notice of Substantial Landscape Completion from the Engineer. Substantial Landscape Completion occurs when all plant materials in the Contract have been planted and all work under Sections 212,213,214 and 623 has been performed, except for the Section 214 pay item, Landscape Maintenance. If the Notice of Substantial Landscape Completion is issued during the spring planting season as defined in subsection 212.03, the Landscape Establishment period begins immediately and lasts for a period of 12 months. If the Notice of Substantial Landscape Completion is issued at any other time, the Landscape Establishment period begins at the start of the next spring planting season and lasts for a period of 12 months.

The contract performance bond, required by subsection 103.03, shall guarantee replacement work during the plant establishment period. If all other work is completed on a project, no contract time will be charged during the plant establishment period.

Subsection 214.06 shall include the following:

Pay Item	**Pay Unit**
Landscape Maintenance (12 Month)	Lump Sum

For each month that landscape maintenance is performed and accepted during the landscape maintenance period as specified in subsection 214.04, payment for landscape maintenance will be made in installments as follows:

(1) 10 percent of the lump sum amount will be paid for each of the eight growing season months, March through October.

(2) 5 percent of the lump sum amount will be paid for each of the winter months, November through February.

Modifications to the installed landscape due to construction errors or survey errors by the Contractor shall be corrected at the Contractor's expense.

REVISION OF SECTION 509
PAINTED STRUCTURAL STEEL

Section 509 of the Standard Specifications is hereby revised for this project as follows:

Subsection 509.01 shall include the following:

Structural steel not identified as powder coated shall be painted per Subsection 509.24 and 509.29.

Structural steel identified as powder coated shall be prepared per Subsection 509.24, and the shop coat (commonly termed a primer) shall be painted per Subsection 509.24. The top coat shall be a powder coat with a thickness and application process intended to last 50 years, and applied per the manufacturer's recommendations. Field applied touch-up powder coat on connections shall be applied per manufacturer's recommendations.

1
REVISION OF SECTION 519
ARCHITECTURAL COMPONENTS

Section 519 is hereby added to the Standard Specifications for this project as follows:

DESCRIPTION

519.01 The work includes constructing architectural components as shown in the plans. For each architectural component identified as a corner monument, the work includes the components of the corner monument (brick masonry veneer, precast concrete caps, precast concrete inset panels, reinforced concrete interior walls, formed void (stay-in-place timber forms or styrofoam forms), reinforced concrete pile cap, steel cables, clevises, brackets, curved reinforced concrete walls, geocomposite drain, steel banding, star inserts mounted on bridge rail, concrete stain on monuments, signs).

Corner monuments include furnishing and placing brick masonry veneer, which include mortar, grout, ties, anchors, and other accessories in accordance with these specifications and in conformity with the lines and dimensions as shown in the plans.

MATERIALS

519.02 Masonry Veneer (Brick)

(a) *Quality Assurance:*

1. Source Limitations: Obtain each type of masonry veneer unit from one source with resources to provide materials and products of consistent quality in appearance and physical properties.

2. Field Mockup: Build one mockup (to include approved masonry veneer, decorative precast concrete cap with joint, steel plate, double soldier courses, double row lock courses, running bond brick courses, mortar, recessed sandstone panels and concrete base; finishes shall be as specified.) to verify selections made under sample submittals and to demonstrate aesthetic effects and set quality standards for materials, satisfactorily show proposed color range, texture, bond, mortar and workmanship, including special coursing, and execution. See detailing on the Plans. Sample Panel: Erect minimum 15'-0" high x 4'-0" minimum sample panel consisting of approved masonry that conforms to requirements. Sample Panel shall include both lower and upper sections of the monument, and shall include the Johnstown Sign Type 2 on the precast concrete cap. A 12-inch portion of the concrete base shall also be included in the sample panel.

3. Masonry Veneer shall meet the following requirements:
   A. ASTM E514: Standard Test Method for Water Penetration and Leakage Through Masonry. Conform to the current requirements of applicable portions of standards, codes, and specifications, except where more stringent requirements are shown or specified.
   B. Masonry work shall be in accordance with the recommendations and standards of the American Standards Association.
   C. ASTM: American Society of Testing and Materials.
   D. ASTM C144: Standard Specification for Aggregate for Masonry Mortar.
   E. ASTM C150: Standard Specification for Portland Cement.
   F. ASTM C270: Standard Specification for Mortar Mix.
   G. ASTM C476: Standard Specification for Mortar and Grout for Reinforced Masonry.

H. ASTM E514: Standard Specification for Moisture Resistance in Masonry Assemblies.
I. PCA, current edition.

(b) *Masonry Veneer*: Face Brick shall be used for the majority of the masonry veneer. Solid bricks shall be used on some corners, ledges, etc. as needed.
1. Supplier / Manufacturer:
   A. ACME Brick of Denver - Castle Rock, CO
      Contact: JT Harris
      E-mail: JTHarris@brick.com
      PH: 303.688.6951
   B. General Shale Company - Denver, CO
      Contact: Mark Stutz
      E-mail: mark.stutzgeneralshale.com
   C. Summit Brick & Tile Company – Pueblo, CO
      E-mail: info@summitbrick.com
      PH: 719.542.8278
2. Color: General Shale "Sonoma", or pre-approved equivalent. (Final color selection to be confirmed with Owner's Representative during the submittal process).
3. Size: 2-1/4" x 3-5/8" x 7-5/8", square edge (NOT beveled) with 3/8" tooled mortar joint
4. Pattern: As indicated on the plans.
5. Sealer / Graffiti Coating: None.

(c) *Mortar and Grout Materials*: ASTM C270, Type N mortar with hydrated lime for all new veneer masonry construction. Minimum compressive strength of 750 psi at 28 days.
1. Portland Cement: ASTM C150, Type 1, natural.
2. Hydrated Lime: ASTM C207, Type S for new construction.
3. Aggregate Sand: ASTM C144.
4. Coarse Aggregate for Grout: ASTM C404, less than 3/8".
5. Water: ASTM C270, clean and suitable for domestic consumption.
6. Mortar Coloring: Contractor shall submit full range of mortar manufacturer's standard mortar colors for selection by the Johntown Representative.
7. Admixtures: Pozzolan with approval; calcium chloride not permitted.
8. Integral Water Repellent: Integral polymeric-based water repellent admixture, conforming to ASTM E514 and achieving an E (Excellent) rating, RainBlok for Mortar by ACM Chemistries, Inc., Norcross, GA, (877) 226-1766, or approved equal.

(d) *Grout Mix*: Minimum compressive strength of 3,000 psi at 28 days.
   (1) 1 part Portland cement, Type 1
   (2) 2-1/4 to 3 parts damp, loose sand
   (3) 1 to 2 parts coarse aggregate
   (4) Pozzolan as per manufacturer's recommendations
   (5) Air entrainment shall be not more than 5% by volume
   (6) Mixtures may change as per manufacturer's recommendations to meet requirements.

3
REVISION OF SECTION 519
ARCHITECTURAL COMPONENTS

Precast Concrete Caps

(a) *Quality Assurance*:
1. Source Limitations: Fabricate each type of precast concrete cap from one source with resources to provide materials and products of consistent quality in appearance and physical properties.
2. Field Mock-up: Build mock-up (to include masonry veneer, mortar, and decorative precast concrete units, sandblasted letters, and stone paint) to verify selections made under sample submittals and to demonstrate aesthetic effects and set quality standards for materials and execution. See detailing on the Plans.

(b) *Protection*: Protect stone painting for at least seventy-two (72) hours after final application of sealer (if required by the Manufacturer).

(c) *Sandblasting (of "Johnstown" on precast concrete caps)*
1. Owner's Representative to provide digital artwork for "Johnstown" in DWG or DXF CAD format.
2. Font Style and Height (on pilaster) shall be as indicated on the Plans.
3. Text and shall be sandblasted 1/8" to 3/16" deep into precast concrete caps and then stained and sealed. Contractor shall provide sandblasted and painted imagery utilizing the selected colors into the field mock-up. The Johnstown Representative who will select final paint colors to be used on the monument and pilaster.
4. See additional detailing on the plans.

(d) *Stone Paint (of Johnstown text on precast concrete caps)*
1. Acceptable Manufacturers / Suppliers:
   A. Manufacturer: Cleveland Lithochrome Inc.
      Fort Scott, Kansas 66701
      PH: 800.658.1876
      www.clevelandlithichrome.net
   B. Supplier: Miles Supply, Inc.
      Locations:
      Barre, VT – 800.396.8049;
      Elberton, GA – 888.283.5863;
      Rockville, MN – 800.789.0815;
      Montrose, PA – 888.278.8383;
      Terrell, TX – 844.883.4108
   C. Approved substitute
2. Acceptable Materials:
   A. Lithochrome® Stone Paint
   B. Colors: Johnstown's representative to choose from the entire Lithochrome color palette, but Contractor to use "Light Yellow" and "Golden Yellow" for the Town "logo" and "Dark Brown" from the standard Litho colors for the mockup for approval.
   C. Contractor shall provide mock-up on precast concrete - sandblasted, painted, and sealed as recommended by the Manufacturer, for the Johnstown Representative to review and approve prior to commencing with the final monument / pilaster artwork.

4

D. Approved substitute.

Decorative Precast Concrete

(a) *Quality Assurance*

1. Fabricator Qualifications: A firm that assumes responsibility for engineering architectural precast concrete units to comply with performance requirements. This responsibility includes preparation of Shop Drawings and comprehensive engineering analysis by a qualified professional engineer.
   A. Designated as a PCI-certified plant for Group A, Category A1 - Architectural Cladding and Load Bearing Units or designated as an APA-certified plant for production of architectural precast concrete products.
2. Quality-Control Standard: For manufacturing procedures and testing requirements, quality-control recommendations, and dimensional tolerances for types of units required, comply with PCI MNL 117, "Manual for Quality Control for Plants and Production of Architectural Precast Concrete Products."
3. Sample Panels: After sample approval and before fabricating architectural precast concrete units, produce sample panels approximately 4 sq. ft. in area as part of the field mock-up for review by Johnstown's Representative. Incorporate full-scale details of architectural features, finishes, textures, and transitions in the field mockup.
   A. Build sample panels as part of the field mock-up (to include masonry veneer, and decorative precast concrete units) to verify selections made under sample submittals and to demonstrate aesthetic effects and set quality standards for materials and execution. See detailing on the Plans.

(b) *Decorative Precast Concrete*

1. Integral Color: Davis Color: Pebble. Submit color sample to Johnstown's Representative from final review and approvals.
2. Contractor / supplier to provide detailed shop drawings to include thickness, dimensioning, materials, colors, face texture / finish, reinforcement, attachment, grouting, and compliance / understanding of installation detailing, etc. in formal submittal package, based on the conceptual detailing indicated on the Plans.

(c) *Finishes*

1. Exposed faces shall be free of joint marks, grain, and other obvious defects. Corners, including false joints shall be uniform, straight, and sharp. Finish exposed-face surfaces of decorative precast concrete units to match approved sample panels and as follows:
   A. Acid Etch Finish: Prior to fabrication of decorative precast concrete elements, Contractor shall submit two samples of precast concrete of the specified color as part of the field mock-up.. One sample shall have a light acid etch, and the second sample shall have medium acid etch finish. Johnstown's Representative will review samples and make a selection.
2. Finish exposed (top, back, sides) surfaces of decorative precast concrete units to match face-surface finish.

Reinforced Concrete Interior Walls, Reinforced Concrete Pile Cap

(a) Concrete shall conform to Section 601.
(b) Reinforcing steel shall conform to Section 602.

REVISION OF SECTION 519
ARCHITECTURAL COMPONENTS

(c) Formed void shall be stay-in-place timber forms or Styrofoam forms, may remain wholly or partially in-place, and shall conform to Section 601.

Steel Cables

(a) Steel Cable shall be 1.5" Dia. IWRC Six Strand Galvanized Steel Cable, and shall be compatible with the specified cable fittings. Steel Cable shall be supplied by:

Denver Wire Rope
Phone: 1.800.873.3697
Website: www.denverwirerop.com

(b) Cable Fittings shall be "swage less" style fittings, as manufactured by:

Esmet, Inc,
Phone: 1-800-321-0870
Website: www.esmet.com

Machined Clevis Socket: Electroline Model ID-1150-V (with pin 2" diameter, EIPS breaking strength 228,000 pounds, zinc plated steel), Quantity - 32

(c) Spare Parts and Assembly Kit, as manufactured by:

Esmet, Inc.
phone: 1-800-321-0870
web site: www.esmet.com

Plugs: MZ-19150 , Quantity – Six (6) sets

Sleeve: ID-9150-V, Quantity – Six (6)

Assembly Kit: SP 307 W, Quantity - One (1)

(d) Thread Locker shall be manufactured by Saf-T-Lok, 1-800-222-2087, www.saftlok.com, Thread locker shall be T62 High Strength Thread Locker, or approved equivalent

Architectural and Structural Steel Components

Architectural and Structural Steel Components. Custom fabricated from carbon steel of the dimensions and configuration shown in the plans and details. Steel components shall conform to the requirements of Section 509 and shall be galvanized and duplex coated in accordance with Section 522, Duplex Coating System. Paint color shall be selected by Johnstown's Representative.

6
REVISION OF SECTION 519
ARCHITECTURAL COMPONENTS

CONSTRUCTION REQUIREMENTS

519.03 Architectural components shall be constructed at the location and in conformity with the dimensions identified in the plans.

Field Mock-Up
The intent of the field mock-up is to review the proposed materials and finishes. The Town of Johnstown representative shall review and approve the field mock-up prior to adding finishes to the Corner Monuments.

The mock-up shall be constructed on or near the project site.

The mock-up shall be single-sided, and sacrificial.

The mock-up support structure may be constructed from wood, metal, concrete or a combination of these materials, at the Contractor's choice.

The concrete structural wall and footings are not required to be included with the mock-up.

Masonry Veneer (Brick)
Masonry veneer (brick) shall meet the following requirements:

(a) *Installation, General*
1. Use full-size units without cutting if possible. If cutting is required to provide a continuous pattern or to fit adjoining construction, cut units with motor-driven saws; provide clean, sharp, unchipped edges. Allow units to dry before laying unless wetting of units is specified. Install cut units with cut surfaces and, where possible, cut edges concealed.
2. Select and arrange units for exposed unit masonry to produce a uniform blend of colors and textures. Mix units from several pallets or cubes as they are placed.
3. Wetting of Brick: Wet brick before laying if initial rate of absorption exceeds 30 g/30 sq. in. (30 g/194 sq. cm) per minute when tested according to ASTM C 67. Allow units to absorb water so they are damp but not wet at time of laying.

(b) *Tolerances*
1. Dimensions and Locations of Elements:
   A. For dimensions in cross section or elevation, do not vary by more than plus 1/2 inch or minus 1/4 inch.
   B. For location of elements in plan, do not vary from that indicated by more than plus or minus 1/2 inch.
   C. For location of elements in elevation, do not vary from that indicated by more than plus or minus 1/4 inch in a story height or 1/2 inch total.
2. Lines and Levels:
   A. For bed joints and top surfaces of bearing walls, do not vary from level by more than 1/4 inch in 10 feet or 1/2 inch maximum.

7
REVISION OF SECTION 519
ARCHITECTURAL COMPONENTS

B. For conspicuous horizontal lines, do not vary from level by more than 1/8 inch in 10 feet, 1/4 inch in 20 feet, or 1/2 inch maximum.
C. For vertical lines and surfaces, do not vary from plumb by more than 1/4 inch in 10 feet, 3/8 inch in 20 feet, or 1/2 inch maximum.
D. For conspicuous vertical lines, such as external corners, reveals, and expansion and control joints, do not vary from plumb by more than 1/8 inch in 10 feet, 1/4 inch in 20 feet, or 1/2 inch maximum.
E. For lines and surfaces, do not vary from straight by more than 1/4 inch in 10 feet, 3/8 inch in 20 feet, or 1/2 inch maximum.

3. Joints:
   A. For bed joints, do not vary from thickness indicated by more than plus or minus 1/8 inch, with a maximum thickness limited to 1/2 inch.
   B. For exposed head joints, do not vary from thickness indicated by more than plus or minus 1/8 inch.

(c) *Mortar Bedding and Jointing*
1. Lay masonry units with completely filled bed and head joints; butter ends with sufficient mortar to fill head joints and shove into place. Do not deeply furrow bed joints or slush head joints.
2. Tool exposed joints slightly concave when thumbprint hard, using a jointer larger than joint thickness unless otherwise indicated.

(d) *Anchoring Masonry to Structural Steel and / or Concrete*
1. Anchor masonry to structural steel and concrete, where masonry abuts or faces structural steel or concrete to comply with the following:
   A. Provide an open space not less than 1/2 inch wide between masonry and structural steel or concrete unless otherwise indicated. Keep open space free of mortar and other rigid materials.
   B. Anchor masonry with anchors embedded in masonry joints and attached to structure.
   C. Space anchors as indicated, but not more than 24 inches o.c. vertically and 36 inches o.c. horizontally.

(e) *Repairing, Pointing and Cleaning*
- 1. In-Progress Cleaning: Clean unit masonry as work progresses by dry brushing to remove mortar fins and smears before tooling joints.
- 2. Final Cleaning: After mortar is thoroughly set and cured, clean exposed masonry as follows:
   A. Test cleaning methods on sample wall panel; leave one-half of panel uncleaned for comparison purposes.
   B. Clean brick by bucket-and-brush hand-cleaning method described in BIA Technical Notes 20.

(f) *Masonry Waste Disposal*

8
REVISION OF SECTION 519
ARCHITECTURAL COMPONENTS

1. Waste Disposal as Fill Material: Dispose of clean masonry waste, including excess or soil-contaminated sand, waste mortar, and broken masonry units, by crushing and mixing with fill material as fill is placed.

   A. Do not dispose of masonry waste as fill within 18 inches of finished grade.

2. Excess Masonry Waste: Remove excess clean masonry waste that cannot be used as fill, as described above or recycled, and other masonry waste, and legally dispose of off Owner's property.

(g) *Environmental Conditions*
1. Maintain materials and surrounding air temperature to minimum 50 degrees F prior to, during and forty-eight (48) hours after completion of masonry work.
2. During freezing or near-freezing weather, provide adequate equipment or cover to maintain a minimum temperature of 50 degrees F and to protect masonry work completed or in progress.
3. Maintain temperature of mortar and grout between 70 degrees F and 100 degrees F.
4. Contractor shall use only one (1) type mortar to ensure uniform color. Masonry cement is not permitted.
5. Protect partially completed masonry against weather when work is not in progress by covering top of walls with strong, waterproof, non-staining membrane. Extend membrane at least 2' down both sides of walls and anchor securely in place.

(h) *Cold Weather Installation*
1. Do not use frozen materials or materials mixed or coated with ice or frost.
2. Do not use anti-freeze compounds, calcium chloride, or substances containing calcium chloride in mortar or grout.
3. Do not build on frozen work. Remove and replace work damaged by frost or freezing.
4. Do not heat water above 106 degrees F.
5. When mortar or grout materials have been combined, temperature of the mixture shall not be less than 70 degrees F or more than 100 degrees F.
6. Materials shall be preconditioned and protected as follows:

   A. When air temperature is below 40 degrees F and above 32 degrees F, heat mixing water. Protect from rain or snow for 24 hours by means of waterproof covers.
   B. When air temperature is below 32 degrees F and above 20 degrees F, heat both sand and mixing water. Maintain a temperature of at least 40 degrees F on both sides of work by means of suitable covers or enclosures for twenty-four (24) hours.
   C. When air temperature is 20 degrees F and below, heat sand, mixing water and brick material and provide heated enclosures. A temperature of at least 40 degrees F shall be maintained within enclosures for forty-eight (48) hours.

7. Periods required for protection and maintenance of specified temperatures may be reduced to 1/2 of those specified herein before if Type III Portland cement is used with the Engineer's approval.

9
REVISION OF SECTION 519
ARCHITECTURAL COMPONENTS

(i) *Hot Weather Installation*
1. During very hot weather and drying wind, the Johnstown representative may order very light fog spray of mortar bedding areas several times during the first twenty-four (24) hours to prevent premature drying of mortar.

(j) *Sandblasting*: See subsection 519.02(c) Finishes above and Plans for more specific information.

(k) Lithichrome Stone Paint *(of Johnstown text on precast concrete caps)*
1. Application:
   A. Surfaces shall be dry and properly prepared per manufacturer's recommendations. Protect surrounding areas from over-spray, run-off and tracking. Divide surfaces into small work sections using wall, joint lines, or other stationary breaks as natural stopping points.
   B. Apply specified stone paint per Manufacturer's instruction.

(l) *Mortar Batch Control*
1. Colored Mortar: To be selected from full range of available options by Johnstown's representative.
2. Use mortar within two (2) hours of mixing at temperatures over 80 degrees F, and 2-1/2 hours at temperatures under 50 degrees F.

(m) *Joints*
1. General: Install brick masonry with 3/8" joints maximum, unless otherwise indicated
2. Remove excess mortar and smears upon completion of work.
3. Point out or replace defective mortar to match adjacent work.
4. Clean soiled surfaces using a non-acidic solution which will not harm adjacent surfaces. Consult masonry manufacturer for acceptable cleaners.

(n) *Cutting and Fitting*
1. Cut and fill for fasteners, mounting plates, pipes, conduit sleeves, and other items as required. Cooperate fully with other Sections to ensure correct size, shape, and location.
2. Obtain Johntown's representative approval prior to cutting or fitting any area which is not indicated on the Drawings or which may impair appearance or strength of masonry work.

(o) *Cleaning and Protection*
1. General: New masonry shall be thoroughly cleaned upon completion of the work.
2. Remove and replace broken or fractured units. Remove excess mortar and smears upon completion of work. Point or replace defective mortar to match adjacent work.
3. Clean soiled surfaces exposed to view using a non-acidic solution which will not harm masonry or adjacent materials. Consult manufacturer for acceptable cleaners. Use non-metallic tools in cleaning operations. Leave surfaces prepared for further sealers or coatings, if specified.

(p) *Field Quality Control*

10
REVISION OF SECTION 519
ARCHITECTURAL COMPONENTS

1. General: Installation of brick masonry, mortar and grout, and workmanship of joints shall be in accordance with the standards approved in the sample panel.
2. Cut bricks shall be sound and free of cracks or other defects that may interfere with the proper placing of the unit or impair the strength or performance of the construction.
3. Face or faces that are exposed shall be free of chips, cracks, or other imperfections to the satisfaction of the Johnstown's Representative and CDOT.
4. Contractor shall promptly remove rejected brick veneer or portions of the work and replace to match the quality of the approved sample panel.

Decorative Precast Concrete

(a) *Installation*

1. Install clips, hangers, bearing pads, and other accessories required for connecting architectural precast concrete units to supporting members and backup materials.

2. Erect architectural precast concrete level, plumb, and square within specified allowable tolerances. Provide temporary supports and bracing as required to maintain position, stability, and alignment of units until permanent connections are completed.

   A. Maintain horizontal and vertical joint alignment and uniform joint width as erection progresses.
   B. Unless otherwise indicated, maintain uniform joint widths of 3/4 inch.

3. Connect architectural precast concrete units in position by bolting, welding, grouting, or as otherwise indicated on Shop Drawings. Remove temporary shims, wedges, and spacers as soon as practical after connecting and grouting are completed.

(b) *Erection Tolerances*

1. Erect architectural precast concrete units level, plumb, square, and in alignment without exceeding the noncumulative erection tolerances of PCI MNL 117, Appendix I.

(c) *Repairs*

1. Repair architectural precast concrete units if permitted by the Johnstown Representative. Johnstown's Representative reserves the right to reject repaired units that do not comply with requirements.

(d) *Cleaning*

1. Clean surfaces of precast concrete units exposed to view.
2. Clean mortar, plaster, fireproofing, weld slag, and other deleterious material from concrete surfaces and adjacent materials immediately.
3. Clean exposed surfaces of precast concrete units after erection and completion of joint treatment to remove weld marks, other markings, dirt, and stains.
   A. Perform cleaning procedures, if necessary, according to precast concrete fabricator's recommendations. Protect other work from staining or damage due to cleaning operations.
   B. Do not use cleaning materials or processes that could change the appearance of exposed concrete finishes or damage adjacent materials.

11
REVISION OF SECTION 519
ARCHITECTURAL COMPONENTS

Steel Cable

(a) The placement and installation shall be as shown on the plans. Prior to start of work the Contractor shall field measure the bracket and cable anchor locations to verify actual cable lengths required in each location.

(b) Prior to start of work, the Contractor shall submit a 12-inch sample of cable, and one of each fitting and hardware type for approval. Work shall not begin until written approval of the samples has been received from the Engineer. Material substitutions will not be allowed unless approved prior to bidding.

(c) After cable installation is approved by owner, Contractor shall apply Thread locker to the threads fasteners and hardware so nuts cannot be removed or tampered with.

(d) Installation of the steel cable, fittings and thread locker shall be in accordance with manufacturer's recommendations and instructions.

Architectural and Structural Steel Components

(a) Placement and installation shall be as shown on the plans.

(b) Prior to the start of work, the Contractor shall submit shop drawings to the Engineer for review and approval. Contractor shall field verify monument dimensions prior to fabricating steel components. Shop drawings shall conform to subsection 105.02 and shall include: detailed dimensions of each type of architectural and structural steel component; detailed information regarding fasteners and hardware; and notes describing materials and finishes.

METHOD OF MEASUREMENT

519.04 Corner monuments will be measured as the number of corner monuments accepted. For each architectural component identified as a corner monument, the work includes the components of the corner monument (brick masonry veneer, precast concrete caps, precast concrete inset panels, reinforced concrete interior walls, formed void (stay-in-place timber forms or styrofoam forms), reinforced concrete pile cap, steel cables, clevises, brackets, curved reinforced concrete walls, geocomposite drain, steel banding, star inserts mounted on bridge rail, concrete stain on monuments, signs on northwest and southeast corner monuments).

The work includes all labor, materials, and equipment necessary for the corner monument, including masonry veneer (brick), mortar, grout, ties, anchors, precast concrete caps, sandblasting, stone painting, decorative precast concrete units, and other accessories, which will not be measured and paid for separately, but shall be included in the work.

The cost of constructing and removing one field mock-up shall be incidental to the Corner Monuments pay item, and shall not be measured nor paid for separately.

BASIS OF PAYMENT

519.05 The accepted quantity of architectural components will be paid for at the contract unit price.

Payment will be made under:

Pay Item	Pay Unit
Corner Monuments	Each

1
REVISION OF SECTIONS 601 AND 708
STRUCTURAL CONCRETE STAIN

Section 601 and 708 of the Standard Specifications are hereby revised to include the following:

Subsection 601.01 is revised to include the following:

This work consists of: (I) Class 2 surface finish of concrete to receive Concrete Stain; (2) providing and applying an opaque structural concrete stain to all concrete surfaces previously designated in the Contract to receive a structure concrete stain; and (3) provide up to 5-gallons of pre-mixed touch-up stain.

The color of the structural concrete stain shall be as noted on the plans, and shall be Approved by the Engineer from test panels provided by the Contractor.

The structural concrete stain shall be one of the following products or Approved equals:

1. RAINSTOPPER RS400 - Semi Transparent Stain

   Textured Coatings of America
   Pro-Coat Systems, Inc.
   5775 Stapleton Drive North
   Denver, Colorado 80216
   303-322-9009

2. "Acrylic" Structural Concrete Stain

   Anchor Paint Co. of Denver, Inc.
   641 South Jason
   Denver, Colorado 80223-2305
   303-744-2361

3. Bridge and Highway Concrete Sealer, B97-Series

   The Sherwin-Williams Company
   543A Santa Fe Drive
   Denver, Colorado 80204
   303-893-1303

Subsection 601.03 is revised to include the following:

Structural Concrete Stain as specified in subsection 708.08

Subsection 601.09(f) is revised to include the following:

All concrete forms shall be treated with a water based concrete form release agent prior to placing reinforcement for surfaces to which structural concrete stain is to be applied.

2
REVISION OF SECTIONS 601 AND 708
STRUCTURAL CONCRETE STAIN

Subsection 601.14 (a), third paragraph, is deleted and replaced with the following:

Structural concrete stain shall be the final finish for all concrete surfaces designated on the plans and in these specifications.

Subsection 601 .14(b) 4 is deleted and replaced with the following:

Unless otherwise shown on the plans, the structural concrete stain shall be applied to all exposed concrete elements of the structure above the ground line, and shall extend 1-foot below the finished ground line. Bridge bearing devices, fence, and steel bridge rail components shall be masked or otherwise protected to prevent structural concrete stain from coming into contact with them.

The color of the Structural Concrete Stain shall have the written approval of the Engineer prior to final batching and application on the project. The final color of the approved structural concrete stain shall be determined as follows:

1. 2 foot by 2 foot samples of the colors required by the Contract, shall be submitted to the Engineer for Approval. The Stain samples shall be applied to a surface similar in texture to the concrete surface on which the stain will be applied on the project. The Stain samples shall be applied by the same methods to be used in field application.

2. At least three weeks prior to beginning of the application of the structural concrete stain, 100 sf test panels shall be prepared for final color Approval. The test panels shall be produced on the actual concrete surface on which the final product will be placed, at a location recommended by the Contractor and approved by the Engineer. The stain shall be applied to the test panels by the same methods to be used in the final field application. The Engineer will be allowed three business days for the stain to dry after stain application to the test panels and to issue Approval.

Concrete finishing and curing shall be completed in accordance with the specification prior to the application of the Stain. The concrete finish to which the structural concrete stain is to be applied shall be a Class 2 Finish, except as modified below:

1. Following curing of the concrete in accordance with Subsection 601.13, all projections and bulges shall be removed and the surface sandblasted. Sandblasting shall profile the concrete surface, remove all form release agents, and all other deleterious materials that would inhibit the bond of the Structural Concrete Stain. The profile of the sandblasted concrete surface shall be equivalent to Concrete Surface Profile Three (CSP 3) as defined in Technical Guideline No. 03732, "Selecting and Specifying Concrete Surface Preparation for Sealers, Coatings, and Polymer Overlays" by the International Concrete Repair Institute. The Contractor shall provide a CSP 3 chip for use on the project.

3
REVISION OF SECTIONS 601 AND 708
STRUCTURAL CONCRETE STAIN

2. A mortar mix, proportioned by volume, consisting of one part Portland cement, two to three parts sand (conforming to the requirements of ASTM C 144), and an approved bonding agent shall be used to patch all holes produced by form ties, honeycombing, voids 1/2 inch or larger in any dimension, broken corners and edges, and other defects. The mortar mix shall include an approved bonding agent. The quantity and application procedure of the bonding agent shall be in accordance with the recommendations of the manufacturer of the bonding agent. Areas to be patched shall be moistened with water before the mortar is applied, and the patched area, shall be float finished and left flush with the concrete surface without checking or cracking of patches. Patching shall be done when the ambient temperature is at least 40°F. Holes deeper than 3/4 inch shall be filled in layers that do not exceed 1/2 inch in thickness.

3. Within 24 hours prior to applying structural concrete stain, the concrete surface to be stained shall be cleaned by water blasting at a minimum pressure of 3,000 psi and at a rate of 4 to 14 gallons/minute, to remove dust, dirt, and other materials that would inhibit penetration of the stain. If the surface is contaminated before application of the stain, it shall be re-cleaned as required prior to application of the stain.

New concrete shall be at least 28 Days old or as approved in writing by the stain manufacturer before the stain is applied.

Two applications of stain are required. Each application shall be applied at a rate of 200 to 250 square feet per gallon. (Approximately 3 mils dry film thickness.) The second application shall not be made within 12 hours of the first application.

If the surface is contaminated between applications, it shall be re-cleaned as stated above prior to the making the second application.

The stain shall be mixed mechanically and applied by spraying. Workmanship shall be such that the final stained surface is colored uniformly and presents a pleasing appearance. Any areas determined by the Engineer to be insufficiently stained shall be re-stained.

The stain shall be applied only when the ambient temperature is between 40°F and 90°F, and is anticipated to remain above 40°F for a minimum of twenty-four hours. The surface to be stained shall be dry and free of frost.

Subsection 601.19 is revised to include the following:

Structural Concrete Stain will not be measured, but shall be the surface area quantity shown on the plans; except that measurements will be made when field changes are ordered, or for an error of plus or minus 5 percent of the plan quantity for each structure to be stained.

4
REVISION OF SECTIONS 601 AND 708
STRUCTURAL CONCRETE STAIN

METHOD OF MEASUREMENT

Subsection 601.19 is revised to include the following:

The quantity of Structural Concrete Stain to be paid for will not be measured, but will be the quantities shown on the plans in square yards, completed and accepted by the Engineer in compliance with the plans and specifications. Plan quantity exceptions will be: (1) when field changes are ordered, or (2) when it is determined that there are discrepancies on the plans in an amount plus or minus 5 percent of the plan quantity for the structure. Structural Concrete Stain shall be in accordance with Section 601 of the CDOT Standard Specifications for Road and Bridge Construction, and with the Revision to Section 601 and 708 – Structural Concrete Stain.

BASIS OF PAYMENT

Payment shall be made at the applicable contract unit price for the Bid Item and shall include full compensation for all water-based form release agent, sample preparation, abrasive blasting, patching materials and application, structural concrete stain and application, labor, equipment, tools, and materials necessary to complete the work.

Pay Item	**Pay Unit**
Structural Concrete Stain	Square Yard

Subsection 708.08 is revised to include the following:

708.08 Structural Concrete Stain: The Stain shall be a one-component, non-vapor barrier, waterborne acrylic resin. No sand or other texturing agents will be permitted.

PHYSICAL PROPERTIES

Solids by Volume: 40%, plus or minus 5%

A material safety data sheet (MSDS) prepared in accordance with Federal Standard 313 and a complete set of manufacturers mixing and application instructions shall be submitted to the Engineer before the Contractor begins applying the Stain.

REVISION OF SECTION 607
FENCE (SPECIAL)

Section 607 of the Standard Specifications is hereby revised for this project as follows:

Subsection 607.01 shall include the following:

Ground mounted fences installed between the two bridges consist of the construction of fence in accordance with these specifications and in conformity with the lines and grades shown on the plans or established.

Subsection 607.02 shall include the following:

Fence material shall conform to the materials identified in the contract plans, including Section 509 of the Standard Specifications.

Subsection 607.03 shall include the following:

Fence components and assembled fence shall conform to the configurations, dimensions, and grades shown in the contract plans.

Subsection 607.04 shall include the following:

Ground mounted fences installed between the two bridges will be measured by the linear foot along the base of the fence from outside to outside of end posts, and shall include all metal, connections, galvanizing, paint and all other incidentals to the erection of the fence. Gaps between posts or gaps between fence panels will not be subtracted from the measurement.

Subsection 607.05 shall include the following:

The accepted quantities of fence will be paid for at the contract unit price per linear foot.

Payment will be made under:

Pay Item	**Pay Unit**
Fence (Special)	Linear Foot
Fence (Special) (Type A)	Linear Foot

REVISION OF SECTION 609
CURB (SPECIAL)

Section 609 of the Standard Specifications is hereby modified as follows:

Subsection 609.01 shall include the following:

The types of curb are designated as follows:

Curb (Special)

Subsection 609.03 shall include the following:

609.03 Cast-in-Place Concrete Curb and Curb (Special).

Subsection 609.06 shall include the following:

Curb (Special) will be measured by linear foot along the front face of the section at the finished grade elevation. Deduction in length will be made for drainage structures, such as catch basins, drop inlets, etc., installed in the curb, gutter, or curb and gutter.

Subsection 609.07 shall include the following:

Payment will be made under:

Pay Item	**Pay Unit**
Curb (Special)	Linear Foot

REVISION OF SECTION 613
ELECTRICAL CONDUCTOR IDENTIFICATION

Section 613 of the Standard Specifications is hereby revised for this project as follows:

Section 613.08 shall include the following:

All electrical conductors shall be tagged as follows:

Electrical conductor cable tags shall be located below the termination in the base of the street light, in the pull box, in the pedestal and at the point of termination to existing facilities of the Local Utility Company supplying electrical service. The tags shall be attached with a cable tie. The information written on the tag shall include the direction and approximate length of cable feeds running from where to, etc.

Each incoming conductor shall be individually color coded with 1 tape mark, while outgoing conductors shall have 2 tape marks.

Example:

FEEDS TO PULL BOX
50' NORTH & 75' WEST
THEN TO HIGHWAY SIGN

FEEDS FROM XFMR
250' SOUTH & 75' EAST
200' WEST

Uniform tags are available in a Tag Kit. The Tag Kit consists of: 100 tags, 3 part yellow with 1 hole, 100 black nylon ties and 1 black sharpie pen.

Size	2-1/2" X 5"
Standard Package	Kit
Weight, Kit, Approx.	1.5 Pounds
Color	Yellow

Electrical conductor tagging will not be paid for separately, but shall be included in the cost of the Electrical Conduit and all associated equipment installation.

REVISION OF SECTION 613
WIRING

Section 613 of the Standard Specifications is hereby revised for this project as follows:

DESCRIPTION

This work includes furnishing and installing copper conductor cable with terminations for power source feeds between the communications cabinet and the electrical power source.

Wiring shall also include coiling of cable at utility poles and appropriate pole riser hardware as required by each utility company.

MATERIALS

Copper conductor (THWN CU) cable shall be used to provide power to the locations shown in the plans.

The work shall include all associated fittings, terminations, attachment hardware and all other hardware, labels, tools, and test equipment necessary for a complete installation.

CONSTRUCTION REQUIREMENTS

All work shall be in conformance with National Fire Protection Association (NFPA) 70, National Electric Code (NEC).

METHOD OF MEASUREMENT

Wiring unit price shall be full compensation for work described above, specified in the plans, complete and in place. Furnishing and installing wire, and all associated fittings, terminations, attachment hardware and all other hardware, labels, tools, and test equipment necessary for a complete installation

All labor, materials, equipment, labels, attachment/pole riser hardware, and permits necessary for the wiring of the electric services, cabinets, disconnect pedestals, meter/disconnect pedestals, and all materials or equipment necessary for testing shall be measured and paid for as a lump sum.

BASIS OF PAYMENT

Payment will be made under:

Pay Item	**Pay Unit**
Wiring	Lump Sum

1
REVISION OF SECTION 613
LIGHTING

Section 613 of the Standard Specifications is hereby revised for this project as follows:

Subsection 613.06 shall include the following:

Luminaires shall be mounted in the pedestrian handrail or on the foundations for the landscape lighting. See details on plans for mounting types.

After luminaires are installed and prior to their acceptance, lenses shall be cleaned to provide maximum lumen output.

Subsection 613.07 shall include the following:

The electrical conduit system shall be installed in accordance with CDOT's, *A Policy on the Accommodation of Utilities on Colorado Highways Rights-of-Way* and the following:

All 90-degree elbows and risers shall be galvanized rigid conduit with 40 mil. PVC factory bonded coating inside and out. All 90-degree elbows shall be large sweep 90's.

Excavate minimum 24 inches below base depth of each pull box and backfill with pea rock to promote draining of water.

Placement and setback of the pull boxes shall be coordinated with the ENGINEER.

Subsection 613.08 shall include the following:

All wiring shall be 600 Volt rated, Type: THWN or XHHW as noted on the plans. Conform to the applicable UL and ICEA Standards for the use intended. Copper conductors shall have 600-volt insulation unless otherwise specified or noted on the drawings. Stranded conductors for No. 8 and larger, with the exception of the ground rod conductor, shall be #6 AWG solid, bare, copper and where elsewhere specified or noted on the drawings.

Aluminum Conductors Prohibited: Aluminum conductors will not be permitted.

Insulation: Type THWN/THHN insulation minimum unless otherwise specified or noted on the drawings.

Size: No. 12 minimum unless otherwise specified or noted on the drawings. Not less than NEC requirements for the system to be installed.

Color Coding: Phase, neutral and ground conductors color-coded in accordance with NEC. Connect all Conductors of the same color to the same phase conductor as follows:
120/240V-1PH-3W Color coding shall be:

1. Line 1 = Black
2. Line 2 = Red
3. Neutral = White
4. Ground = Green

2
REVISION OF SECTION 613
LIGHTING

All power and lighting circuits shall include an insulated green equipment grounding conductor.

Type THWN conductors shall be used for all underground conduit runs. Leave sufficient lengths of branch conductors to allow conductor splices to be extracted from pole base for maintenance. Type XHHW shall be used for the service entrance conductors.

Extend three No. 12 AWG Type THWN feeder leads to the luminaires from the cables in the pole base.

Install in-the-line fuses on each feeder lead. Leave sufficient lengths of feeder conductors to allow fuses and conductors to be extracted from pole base for maintenance.

Provide a No. 6 AWG solid, bare, copper wire connection to ground rod with ample length to allow connection to light standard, and system ground conductor.

Attach grounding conductor to the energy supplier's neutral at the service point. Terminate grounding conductor with less than 25 ohms ground reference at the service point. If ground resistance is greater than 25 ohms, add additional ground rod(s) or other ground reference bond to bring the resistance to under 25 ohms resistance to earth. Provide ground rods elsewhere as shown on the drawings.

Butt splices within the bases are not acceptable.

At each pole, provisions shall be made for convenient sectionalizing of the circuits. This shall be done by providing ample length (18 to 24 inches) of branch conductor ends and performing splices using Burndy Uni-tap connectors or an approved equal. Wire nuts are not an acceptable method for splicing. Splicing shall only be performed within the pole bases and splice boxes where applicable.

Subsection 613.09 shall include the following:

Meter Power Pedestal – Provide a combination meter power pedestal all in one with 200A 120/240V meter socket, and fused disconnect for cold sequence metering per Xcel Energy standards in a NEMA 3R stainless steel enclosure. Meter pedestal shall have a panel board for always on loads and a switched panel board for lighting loads, 120/240V-1ph-3W, panelboard (with all main and branch breakers as shown on the panel schedule). Contractor shall bond the neutral and ground bars for service entrance bond and bond to (2) ¾" x 10'-0" copper clad driven ground rods per NEC 250. See the one-line diagram for additional requirements.

"Arc-Flash Hazard Warning" labels shall be furnished and installed by the electrical contractor per the National Electric Code NEC 110.16 and the NFPA 70E, and all other labels required by NFPA 70 shall be installed on All new panels.

2-Plex Receptacle (With Box and Cover)- Provide wall mounted GFCI duplex receptacle in weatherproof back box and cover with heavy-duty metal weatherproof while-in-use covers as shown and detailed on the contract documents. Paint outlet, cover, mounting hardware and exposed conduit to match surface.

3
REVISION OF SECTION 613
LIGHTING

Subsection 613.11 shall include the following:

Meter Power Pedestal shall be measured and paid for at the contract unit price for each, completed and accepted. Price and payment shall include transporting to job site installed and fully operational.

Luminaire (LED) shall be measured and paid for at the contract unit price for each, completed and accepted. Price and payment shall include transporting all materials, installing, leveling, the new LED luminaire and connection to the circuit so that it is fully operable.

2-plex receptacle (with box and cover) shall be measured paid for at the contract unit price for each, completed and accepted. Price and payment shall include transporting to job site installed and fully operational.

Subsection 613.12 is hereby revised to include the following:

Pay Item	Pay Unit
1 Inch Electrical Conduit (Plastic)	Linear Foot
2 Inch Electrical Conduit (Plastic)	Linear Foot
3 Inch Electrical Conduit (Bored)	Linear Foot
Type Two Pull Box	Each
Wiring	Lump Sum
Type A Floodlight	Each
Type B Spot Light	Each
Type C Luminaire (LED) (Special)	Each
Type F Luminaire (Special)(LED)(Step)(Light)	Each
Type FD Ballast Unit	Each
Concrete Foundation Pad	Each
Light Standard Foundation	Each
Meter Power Pedestal	Each
2-Plex Receptacle (With Box and Cover)	Each

All work necessary and incidental to the installation of the electrical conduit as shown in the plans will not be measured and paid for separately but shall be included in the work.

1
REVISION OF SECTION 614
GLOBAL POSITIONING SYSTEM (GPS)

Section 614 of the Standard Specifications is hereby revised for this project to include the following:

DESCRIPTION

The Contractor shall provide Global Positioning System (GPS) Coordinate information for all proposed device, conduit, pull box, manhole, and other surface and underground utility locations on this project installed by the Contractor or by the Utility Companies. Coordinates of proposed devices in the project limits shall be provided. GPS coordinates shall be provided in both hard copy and electronic shape file formats. Hard copy GPS coordinate data shall be stamped with the seal of, and signed by, the Contractor's responsible PLS in charge.

MATERIALS

Documentation verifying the type of GPS unit being proposed for use and the specifications of the unit shall be provided to the Project Engineer for review prior to data gathering.

CONSTRUCTION REQUIREMENTS

The Contractor shall provide geodetic datum for all roadway devices, conduit, fiber optic pull boxes and manholes within the project limits. This shall include Intelligent Transportation System devices, communications cabinets, traffic signal controller cabinets, ramp metering cabinets, automated traffic recorder cabinets, conduit, pull boxes and manholes, in accordance with the Revision of Section 614 – ITS As-Built Documentation.

The Contractor shall use a device designed specifically for mapping GPS information to Universal Transverse Mercator (UTM) Zone 13 coordinate system utilizing 1983 North American Datum (NAD83). Cell phones with GPS capabilities shall not be allowed for determining GPS location.

The GPS data shall be expressed in Latitude and Longitude and Universal Transverse Mercator (UTM) Zone 13 utilizing 1983 North American Datum (NAD83). Altitude shall be expresses in feet:

Latitude and Longitude shall be provided in Decimal Degree (DD) format to a precision of six decimal places.

Example - Latitude: _____ Longitude _____ Altitude (feet) _____

North American Datum shall be provided in coordinates to a precision of three decimal places.

Example - X (easting) _____ Y (northing) _____ Z (feet) _____

For data collection, the Contractor shall use the averaged waypoint. Minimum averaging time at each location shall be two minutes prior to documenting the information.

Accuracy tolerances for data collected by the GPS unit shall be within a maximum of 3 feet.

The Contractor shall completely fill in all information on the forms provided with Revision of Section 614 – ITS As-Built Documentation for submittal to the Project Engineer.

2
REVISION OF SECTION 614
GLOBAL POSITIONING SYSTEM (GPS)

The Contractor shall provide electronic shapefiles with the GPS information for CDOT to import into their software. The mandatory file extensions needed for the shapefiles include .shp, .shx, .dbf, and .prj. The following shapefile attributes shall be collected by the Contractor:

A. Fiber Cables
   (1) Cable size and type
   (2) Depth of cable (in inches)
   (3) Owner
   (4) Cable manufacturer
   (5) Cable length
   (6) Device connected to (if fiber lateral)
   (7) Optical wavelengths to each communication device at the port level
   (8) Patch panel size, type, manufacturer, and position for each fiber

B. Power Cables
   (9) Number and size of conductors
   (10) Depth of cable (in inches)
   (11) Owner
   (12) Cable length

C. Communication Device
   (13) Type
   (14) Manufacturer
   (15) Configuration
   (16) Ports: type and status: active or unused.
   (17) Fiber strand corresponding to each active port
   (18) Port wavelength

D. Fiber/Power Structure (Pull Box / Manhole)
   (19) Location ID
   (20) Direction and number of empty and used conduits
   (21) Structure type – manhole or pull box
   (22) Manufacturer
   (23) Size – diameter of manhole or dimensions of pull box
   (24) Fiber Slack Loop – total length of slack loop in the units reported on the cable
   (25) Fiber Slack Storage Type – note if it is inside a manhole or pull box and if it is connected to a splice canister. Is it a coil or figure eight?
   (26) Hazardous – is the structure hazardous? If so, why? Examples of hazardous structures include confined spaces, atmospheric, concerns, falls from heights due to slip, trips or falls, or manholes over 5’ deep.

E. Splice Enclosure
   (27) Splice enclosure type
   (28) Splice enclosure manufacturer
   (29) Owner
   (30) Installer
   (31) Date installed

(32) Location type
(33) Location description
(34) Grounding method
(35) Site-specific comments

F. Electronic Marker
(36) Marker Type
(37) Marker Manufacturer
(38) Marker Color and Frequency

G. Conduit System
(39) Buried Depth
(40) Encasement type
(41) Manufacturer
(42) Measured length
(43) Installation date
(44) Duct bank height
(45) Duct bank width
(46) Material
(47) Construction status
(48) Duct availability

H. ITS Device Point
(49) Device Type – CCTV, TTI, VMS, MVRD, etc.

I. Power Structure (Meter/Disconnect)
(50) Type – power meter or disconnect
(51) Capacity / Breaker sizes

METHOD OF MEASUREMENT

Global Positioning System (GPS) information gathering will not be measured separately but will be considered incidental to the pay item being installed. This work shall include all labor, materials, and equipment required to complete the work.

BASIS OF PAYMENT

Global Positioning System (GPS) will not be paid for separately but will be considered incidental to the pay item being installed.

1
REVISION OF SECTION 622
PLANTER BOXES

Section 622 of the Standard Specifications is hereby revised to include the following:

DESCRIPTION

This work shall consist of furnishing equipment, labor, fabrication and materials to do work necessary to install Planter Boxes as indicated on the Drawings and as specified herein.

The types of Planter Pots are designated as follows:

Planter Box (Type I)
Planter Box (Type II)
Planter Box (Type II)
Planter Box (Type IV)
Planter Box (Type V)

MATERIALS

Manufacturer: Tournesol Siteworks, toll free 800.542.2282, web site: www.tournesol.com, or pre-approved equivalent. Substitution requests must be reviewed and approved by Owner's Representative prior to bidding.

Style: Delta Collection

Color: "Puddle".

Finish. Orange Peel.

Drain Holes/Irrigation Holes. one drain/irrigation supply hole shall be factory drilled in the center of the base of each planter box. **The location of the irrigation sleeves shall be as indicated in the drawings, in order to place planter boxes in the designated locations and orientation.**

Mounting: Place planter boxes in locations shown on the plans and details. Planter boxes shall not be fastened to concrete.

Orientation: The specified Planter boxes shall be oriented as shown in the drawings.

2
REVISION OF SECTION 622
PLANTER BOXES

Shop Drawings: Prior to ordering the planter boxes, the contractor shall field measure the existing concrete plinths and prepare Planter Box Shops Drawings for review and approval by the Owner. The shop drawings shall illustrate: the size and shape of the concrete plinths; size and location of existing irrigation sleeves/risers; planter box locations and sizes (including shape of base and rim); and each planter box shall be identified with a unique number/letter on the shop drawings. The manufacturer shall label each planter box with the corresponding number/letter to ensure that the planter boxes are installed in the proper locations and orientation. The label shall be placed in a location that will not be visible after the planter boxes are installed and filled with soil.

Planter Box (Type I)

Model: DT-4800
Material: FRP
Dimensions and Weight: 48” wide x 36" tall, 60 lb.
Drain Hole: provide one 1 5/8” diameter drain hole centered in base of planter box.
Quantity: as indicated in the drawings

Planter Box (Type II)

Model: DT-6023
Material: FRP
Dimensions and Weight: 60” wide x 23" tall, 55 lb.
Drain Hole: provide one 1 5/8” diameter drain hole centered in base of planter box.
Quantity: as indicated in the drawings

Planter Box (Type III)

Model: DT-4216
Material: FRP
Dimensions and Weight: 42” wide x 16" tall, 25 lb.
Drain Hole: provide one 1 5/8” diameter drain hole centered in base of planter box.
Quantity: as indicated in the drawings

Planter Box (Type IV)

Model: DT-3614
Material: FRP
Dimensions and Weight: 36” wide x 14" tall, 20 lb.
Drain Hole: provide one 1 5/8” diameter drain hole centered in base of planter box.
Quantity: as indicated in the drawings

3
REVISION OF SECTION 622
PLANTER BOXES

Planter Box (Type V)

Model: DT-4818
Material: FRP
Dimensions and Weight: 48” wide x 18" tall, 30 lb.
Drain Hole: provide one 1 5/8” diameter drain hole centered in base of planter box.
Quantity: as indicated in the drawings

Weed Barrier Fabric shall comply with Section 213 and be installed in the planter boxes as indicated in the drawings.

Potting Soil: commercially available potting soil shall be installed in the planter boxes, as indicated in the drawings.

Drainage Rock: drainage rock shall be installed in the planter boxes, as indicated in the drawings.

Concrete used to construct the planter box pedestals shall be Class B, per Section 601.

CONSTRUCTION REQUIREMENTS

The Contractor shall install the planter boxes at the locations shown on the plans.

Planter Boxes damaged during transport or installation shall be replaced at the Contractor’s expense.

METHOD OF MEASUREMENT

Planter Boxes shall be measured and paid for by the total number of each installed and accepted, as shown on the plans.

Field measurements, shop drawings, drain holes, irrigation holes, drainage rock, weed barrier, and potting soil will not be measured and paid for separately but shall be included in the work.

BASIS OF PAYMENT

The accepted quantities of the Planter Boxes as provided above will be paid for at the Contract unit price per each, which shall be compensation for all labor, equipment and materials including installation and adjustment required to complete the item.

Payment will be made under:

Pay Item	Pay Unit
Planter Box (Special) (Type 1)	Each
Planter Box (Special) (Type 2)	Each
Planter Box (Special) (Type 3)	Each
Planter Box (Special) (Type 4)	Each
Planter Box (Special) (Type 5)	Each

REVISION OF SECTION 623
SPRINKLER SYSTEM

Section 623 of the Standard Specifications is hereby revised as follows:

Subsection 623.32 shall deleted and replaced with the following:

All equipment and labor required to construct the irrigation system as identified in the Plans shall not be measured, but shall be paid for as a single, lump sum for the system, completed and accepted.

Subsection 623.33 shall include the following:

The accepted irrigation system will be paid for at the contract unit price that appears in the bid schedule.

Payment will be made under:

Pay Item	**Pay Unit**
Sprinkler System	Lump Sum

REVISION OF SECTION 625
CONSTRUCTION SURVEYING

Section 625 of the Standard Specifications is hereby revised for this project as follows:

Subsection 625.03 shall include the following:

The Contractor shall provide construction surveying, which shall be performed by a licensed Professional Land Surveyor registered in the State of Colorado.

The horizontal and vertical control for this project has been established as shown on the plans. All available information defining the extent of that control is provided on the plans or is available from the Engineer.

The Engineer shall be notified immediately if actual conditions are not as represented on the plans.

The Contractor shall field verify all lengths and sizes of pipes and elevations for culvert extensions, wingwall and headwall structural elements prior to placing orders for materials. The Contractor shall be responsible for calculating and staking the new flow lines for the ends of pipes, limits of wingwalls, foundation locations and corners of all wingwalls, parapets and retaining walls if applicable.

In Subsection 625.13 delete the last paragraph and replace with the following:

Traffic control for construction surveying will not be measured and paid for separately but will be included in the work.

REVISION OF SECTION 626
MOBILIZATION

Section 626 of the Standard Special Specifications is hereby revised to include the following:

DESCRIPTION

The following items will be paid for under Mobilization (Without Autopay) (Overhead):

(1) Project office expenses
(2) Field office expenses
(3) Administrative salaried labor
(4) Employee mobilization, subsistence, housing
(5) Yards and staging

All other Mobilization items will be paid for under Mobilization (Without Autopay).

BASIS OF PAYMENT

Subsection 626.01 shall include the following:

Partial payments for Mobilization (without Autopay) and Mobilization (without Autopay) (Overhead), as determined by the Engineer, will be made as the work progresses. The Contractor shall submit a schedule of estimated mobilization costs for the above items to be approved by the Engineer before payments are made. The total sum of all payments shall not exceed the original contract amount bid for the item, regardless of the fact that the Contractor may have for any reason, including:

(1) Shutting down the work on the project
(2) Moving equipment away from the project and then back as multiple mobilization were specifically bid into the Construction Agreed Price (CAP) for certain work on the project.
(3) Additional mobilizations unless otherwise approved by the Engineer.

These payments shall be independent of partial payments as defined in Subsection 109.06.

Payment will be full compensation for all work necessary to complete the item.

Payment will be made under:

Pay Item	**Pay Unit**
Mobilization (without Autopay)	Lump Sum
Mobilization (without Autopay) (Overhead)	Lump Sum

Nothing herein shall be construed to limit or preclude partial payments for other items as provided for by the contract.

1
REVISION OF SECTION 626
PUBLIC INFORMATION MANAGEMENT
(TIER I)

Section 626 of the Standard Specifications is hereby revised for this project to include the following.

DESCRIPTION

This work consists of providing regular and continuous public information services throughout the duration of the project. Final approval of approach and collateral will be given by the CDOT Project Engineer with review by CDOT Communications Manager/Public Information Liaison.

STAFF REQUIREMENTS

The PIM shall have at least seven (7) years professional experience in Public/Media Relations, Marketing or another related field acceptable to the Engineer and CDOT's Regional Communications Manager (RCM). The PIM shall have exceptional writing skills and experience working with both print and broadcast media (two original writing samples must be provided to the CDOT Project Engineer and CDOT Communications Manager for review). The Contractor shall submit the Public Information Manager (PIM) and resume as part of the key project staff for approval by CDOT Project Engineer with review by CDOT Communications Manager.

The Contractor shall provide the following public information services on an ongoing basis throughout the duration of the project:

1.0 Public Information Plan

The Contractor shall prepare and maintain a Public Information Plan (PIP) in coordination with CDOT to develop two-way communication of Project information with the public. This PIP shall be used throughout the duration of Work by the Contractor to manage and implement the public information process.

The Contractor shall provide a minimum of one full-time Public Information Manager (PIM), with demonstrated experience and qualifications (e.g., degree in communications, public relations or related field and at least three years of experience in the management and support of the communication/public information function on high-impact, long-term projects. The PIM and any additional staff shall provide communications support to CDOT as outlined throughout this specification.

As significant components of the PIP, there are categories of information that shall be communicated and coordinated between CDOT and the Contractor. These include the following:

1. The Vision of the Project

   Answers to questions such as why the Project is needed, what work will be done, how the Project will benefit customers, how the Project fits into the community, and how the Project fits into broader transportation plans.

2
REVISION OF SECTION 626
PUBLIC INFORMATION MANAGEMENT
(TIER I)

CDOT and the Contractor will provide the Project vision information to the public, as well as the related project details (phasing, traffic, impacts, etc.). All information that is made public must first be approved by CDOT's Communications Manager and/or CDOT's Project Public Information (PI) Liaison.

2. The Project's Progress

CDOT and the Contractor shall provide ongoing messages to keep the public and other stakeholders informed about the project including the schedule, traffic impacts, major milestones, budget, etc. The Contractor shall work with CDOT to develop the messages and CDOT will have final approval before the messages are disseminated

3. Coping During the Project Work

Coping information helps people deal with inconveniences caused by the Project, such as details regarding detours, lane closures, closed ramps and access impacts, information resources available to people, including Transportation Demand Management (TDM) strategies, and other activities that affect residents and businesses.

The Contractor's PIM shall coordinate with the CDOT Project Engineer, CDOT Communications Manager/Project PI Liaison to provide coping information to the public. Final approval will be given by the CDOT Project Engineer with review by CDOT Communications Manager/PI Liaison.

The Contractor's final PIP shall be submitted to CDOT for Approval prior to Notice to Proceed (NTP).

1.1 Public Information Plan Updates

The Contractor shall schedule and hold PIP review meetings with CDOT to review, assess input, and/or modify the Contractor's PIP. These meetings shall be held quarterly after the initial PIP is established and approved by CDOT.

The draft of the proposed revisions to the PIP shall be submitted to CDOT at least 10 working days prior to each PIP review meeting. If changes are required as a result of the meeting, the Contractor shall submit the revised PIP to CDOT for approval within 10 working days of the review meeting date.

2.0 Project Management

The Contractor shall be accessible 24 hours a day, 7 days a week, for activities associated with public information and shall have experience in this area. The Contractor shall provide contact information, including home and mobile numbers; and email addresses to CDOT for acceptance at NTP. Review will include CDOT Communication's Manager/PI Liaison and Project Engineer. Final acceptance is by CDOT Project Engineer.

The Contractor shall hold weekly coordination meetings with CDOT to provide project schedule, accomplishments and planned activities for the upcoming week.

3
REVISION OF SECTION 626
PUBLIC INFORMATION MANAGEMENT
(TIER I)

2.1 Public Information Task Force

As soon as is practical after the NTP, the Contractor shall initiate a Public Information Task Force to implement the Contractor's PIP and integrate with the Public Information efforts of CDOT. At a minimum, this Task Force shall include the Contractor's PIM, the Contractor's Project Manager, CDOT Communications Manager/PI Liaison and CDOT Project Engineer. Upon the first meeting, the Task Force will establish a regular meeting schedule.

2.2 Availability and Response Protocol

The Contractor will be accessible 24 hours a day, seven days a week, for activities associated with public information including the following response schedule for external stakeholders.

AVAILABILITY AND RESPONSE PROTOCOL	
Reactive Reponses	**Timing**
Hotline Calls	Check messages throughout day Respond same day (initial call) or within 24 hours (including weekends if work is occurring)
Email	Same day (within two business days for high volume situations)
Call from CDOT Staff	As soon as possible

4
REVISION OF SECTION 626
PUBLIC INFORMATION MANAGEMENT
(TIER I)

2.3 Deliverables Protocol

The Contractor will submit all Contractor plans, updates, collateral material, etc., for review, acceptance and/or approval by CDOT prior to dissemination.

DELIVERABLES PROTOCOL	
Deliverables	**Timing**
Public Information Manager Contact	Prior to PIM's Notice to Proceed (NTP) with key staff approval
PIM Contact Information	At Pre-Construction Meeting
Final Public Information Plan (PIP)	30 days following NTP (if design build) or Pre-Construction (if CMGC or Design Bid Build)
Revised PIP	Ten (10) Working Days Prior to Review Meeting or as requested
Emergency Response Telephone Tree (if required)	30 days following NTP (if design build) or Pre-Construction (if CMGC or Design Bid Build)
Local Telephone Hotline	30 days following NTP (if design build) or Pre-Construction (if CMGC or Design Bid Build)
Stakeholder Distribution List (if required for non-work zone flyer recipients and emergency service providers)	30 days following NTP (if design build) or Pre-Construction (if CMGC or Design Bid Build)
Lane Closure Reports	Thursdays by noon
Traffic Advisories/Media Releases	48 hours prior to scheduled distribution date
General Public Information and Publications	5 Working Days prior to the scheduled reproduction and distribution
Photos/Video	Submitted to CDOT twice a month or upon request.
Weekly Construction Email Content	Thursday by noon
Public Contact Report	Submitted by DialLog

5
REVISION OF SECTION 626
PUBLIC INFORMATION MANAGEMENT
(TIER I)

2.4 Public Notification Protocol

The Contractor is responsible for notifying the public regarding the impacts of the project. The PIM shall adhere to the following performance expectations for public notification.

NOTIFICATION PROTOCOL	
Proactive Notification Element	**Timing**
Full road closures, detours, and major traffic impacts lasting seven days or longer	14 days prior to the beginning of activity in any area of the Project.
Major project activities (such as major lane shifts, bridge demolitions, etc.) lasting seven days or less	7 days prior to the beginning of the activity
Other remaining types of construction Activities in any area of the Project including: ▪ Night Work ▪ Utilities ▪ Change of business/residential access	7 days prior to the beginning of activity in any area of the Project or as determined jointly by teams
Other construction updates (e.g., cancellation of planned closures, additional lane closures, closure removals, major traffic shifts, etc.) that directly impact the public.	As soon as known with at least 24 hours' notice

3.0 Stakeholders

CDOT has identified the Stakeholders listed below as audiences requiring coordinated outreach by CDOT and the Contractor. The Contractor shall describe in the PIP its proposed approach to communicating with these Stakeholders and coordinating with CDOT. The Stakeholders include, but are not limited to:

Area residents

Property owners and property management companies

Commuters

Transportation management/advocacy organizations

The traveling public

Commercial vehicle operators, Ports of Entry and Denver Permit Office, and Colorado Motor Carriers Association

Local, regional, and state government officials

Business owners, employees, and customers

6
REVISION OF SECTION 626
PUBLIC INFORMATION MANAGEMENT
(TIER I)

Neighborhood associations

Emergency response agencies, such as the Colorado State Highway Patrol, and the local police departments, sheriff departments, fire departments, ambulance service providers, and hospitals

Local community organizations

Tourist destinations and organizations

Delivery and courier services

CDOT employees and other internal team members, including CDOT Headquarters, the Office of Communications and the Government Relations Office

Mass transit agencies/companies

Utility owners

School districts/universities

Railroads

3.1 Stakeholder Involvement Process

The Contractor shall structure communications based on geographic location, construction phases and impacts as well as develop common tools for each stakeholder group to provide for consistency in how stakeholders receive information.

The Contractor shall develop and use individual communications work plans based on the stakeholder groups as well as the information tools to be used to address each stakeholder's informational needs. In total the work plans will identify:

- The customer group(s) that require information
- Location or region of customer group(s)
- What information is needed
- When information is needed
- Tools to be used for disseminated information
- Whether information should be translated or interpreted to ensure effective communication with Limited English Proficient (LEP) populations
- Who will disseminate information
- Results of information dissemination

7
REVISION OF SECTION 626
PUBLIC INFORMATION MANAGEMENT
(TIER I)

3.2 Information Provided to Stakeholders

Project information provided to both internal and external stakeholders will vary depending on their information needs. The need for language translation or interpretation should be evaluated by the Contractor and may be requested by CDOT on different collateral tools as well as at meetings. The following outlines information that shall be provided based on the individual communications work plans.

3.2.1 General Outreach Campaign

The Contractor shall implement an overarching communication program through a coordinated effort with CDOT's Corridor PI team, with individual work plans for stakeholder groups that enables consistent messaging and eases the project's complexity for the end-user. The communications will be focused on three primary areas

1. Construction – Detour coping information and construction impacts
2. Economic – Open for business
3. Vision – Project vision and long-term impact to the community

3.2.2 Construction Activities

PIM shall submit a Lane Closure Report **each Thursday,** for the following week's activities, to the contacts listed in the Report and at the end of this specification. Please contact Communications Manager for an electronic copy of this report. Notification of construction events will include:

1) Description of the activity and why it is necessary
2) The start of the activity
3) The end of the activity including any updates to the above that will be disseminated at weekly meetings
4) The impacts to traffic and property (businesses and residences)
5) Communications tools to share information
6) Project Hotline number, PIM/Contractor contact numbers, Project email, web site, etc.

3.2.3 Method of Handling Traffic

The Contractor shall issue information regarding the Method of Handling Traffic (MHT) for the entire Project for commuters, emergency services agencies, residents, and businesses within the defined construction area who will be impacted by the Project including:

- Full road or ramp closures, alley and driveway access impacts, detours, and major traffic impacts lasting seven days or longer or as otherwise agreed to by the Contractor and CDOT.

8
REVISION OF SECTION 626
PUBLIC INFORMATION MANAGEMENT
(TIER I)

The Contractor shall include the following elements within the notifications:

1) Residents and businesses impacted or affected
2) Proposed alternative routes and detours and resulting estimated delay times
3) Contractor contact for further information (hotline and email address)
4) Project web site address for further information
5) Description of activity and why it is necessary
6) Start and end dates and times of activities

The Contractor shall also maintain basic information, contact names, and phone numbers for other construction projects that may impact traffic conditions on the Project or surrounding local street network. This information shall be included in the construction information maintained by the Contractor.

3.2.4 Commercial Vehicle Access and Restriction Information

The Contractor shall notify commercial vehicle operators/Ports of Entry of construction events, including at least:

1) Description of the activity
2) The start of the activity
3) The end of the activity
4) Restrictions such as width or height, speed limit reductions, etc., and alternate routes if necessary
5) Any updates to the above on an ongoing basis

3.2.5 Bicycle, Pedestrian, Handicapped Mobility, Recreational and Other Access

The Contractor shall clearly define and communicate to the public and other associated stakeholder groups its plans for maintaining bicycle access, pedestrian access, recreational access and handicapped mobility.

3.3 Data Collection Management

The ongoing information needs of the Project stakeholders will be primarily managed using the work plans, as detailed above. In order to accurately and reliably share construction information with the Project's many stakeholders, the Contractor shall use the following process to collect data:

1. Gather data and information from regular project meetings such as methods of communications and the Contractor's Methods of Handling Traffic (MHT)
2. Gather data and information from weekly Project Management meetings
3. Gather data and information from contact, calls, emails, etc. from stakeholders
4. Determine what type of public information strategy/action is necessary

5.
    a. Crisis Communications includes response to crisis in field or regarding Project
    b. PI Outreach includes proactive public education regarding particular construction activities, impacts, etc.
    c. Issues Management includes strategy development and implementation of specific issues management approaches
6. Review approach with CDOT PI staff
7. Implement outreach tool and issue strategy with draft review from CDOT
8. Finalize approval from CDOT, submitting final documents to the Document Control System (if in place)
9. Depending on the strategy, either CDOT or the Contractor shall be responsible for the final execution of the PI Outreach Tool, Crisis Communications Approach or Issue Strategy

3.3.1 Public Contact Management

The Contractor shall track all public contacts made from all stakeholders. The Contractor PIM shall maintain a logbook of inquiries made by citizens and businesses, including names, addresses, phone numbers, comment information, contact date, and subsequent action (with date) taken during construction. The PIM shall enter this information into CDOT's ticket tracking system; the system shall provide the Engineer a copy each week. All inquiries and complaints shall be followed up with either a return phone call/email or a meeting, as warranted. The PIM shall participate in and document any meetings held with affected individuals, and maintain ongoing communications with businesses directly impacted by construction on a weekly basis or more frequently as warranted (such as when the work zone changes and a new access is impacted).

3.3.2 Stakeholder Contact

The Contractor shall work with the Public Information Task Force to develop a master distribution list of contacts to be used for general public information. CDOT's "govdelivery.com" system shall be used as the basis for development of this list/database. This list or database shall be presented to CDOT for review at time of NTP. Through the Contractor's data gathering process, the Contractor shall assist CDOT in supplementing govdelivery.com.

4.0 Public Information Approaches and Tools

The Contractor shall employ a variety of strategic public information approaches and public information tools to ensure that stakeholders have the necessary information about the project schedule, progress and construction information, as well as address issues as they arise.

10
REVISION OF SECTION 626
PUBLIC INFORMATION MANAGEMENT
(TIER I)

4.1 Community/Business Relations

The Contractor shall develop and implement community and business relations strategies that communicate coping messages to the public. Coping strategies will focus on providing the public with the information they need to make short-term and long-term decisions about how they can deal with the work with as little disruption as possible. Each strategy will be uniquely tailored to individual stakeholder needs potentially requiring such involvement as one-on-one meetings, event participation, additional research, multi-lingual communications, providing regular calls or contact, etc.

4.2 Media Relations

During the Project, the Contractor shall immediately notify CDOT of any situations involving the media, and all communication requests will be tracked by CDOT. CDOT will handle all media inquiries and media requests unless otherwise requested. The Contractor shall write, as requested, media releases, traffic advisories and other information. CDOT will distribute per their standards. The Contractor shall be familiar with, and comply with, CDOT's required protocol when contacted by media representatives.

4.3 Government Relations

CDOT will develop and implement a comprehensive government relations program. The Contractor shall assist in giving timely information to CDOT regarding construction activities, and shall participate in meetings as requested.

Throughout the work, all communication requests received by the Contractor from government entities shall be immediately referred to CDOT (not including those requests related to project management or coordination for City permits, or related to the Contractor's responsibilities under the Contract Documents).

4.4 Public Information Outreach Tools

The key is to ensure that the public information tool box has the flexibility to meet different stakeholder needs. The Contractor shall continue to coordinate with CDOT to ensure that the tools employed during the Project are effective. The need for language translation or interpretation should be evaluated by the Contractor and may be requested by CDOT for various tools.

4.4.1 Hotline

The Contractor shall provide information to CDOT who will record a message for the Project information hotline. The hotline message shall include Project name, construction schedule (including completion date), travel impacts/detours, days/hours of impacts, etc. The hotline will serve as a tool for receiving community input, answering questions, and prompting possible solutions regarding Project-related activities. The hotline will be available to the public 24 hours a day, seven days a week, and will be publicized in all information materials and signage throughout the corridor. The hotline will be updated weekly or as required by changes in major construction activities or travel impacts. The Contractor will be responsible for returning all calls that come through the Project information hotline that pertain to their specific construction project.

Additionally, the hotline will be staffed during major construction activities as necessary. The Contractor shall follow the Response Protocol. All calls and resulting actions from this hotline will be logged and integrated into CDOT's ticket tracking system.

11
REVISION OF SECTION 626
PUBLIC INFORMATION MANAGEMENT
(TIER I)

4.4.2 Email

The Contractor shall monitor the Project wide email system daily. All inquiries and complaints shall be followed up with a return phone call or email from the Contractor within 24 hours. CDOT will help to review incoming email inquiries and coordinate with the appropriate Contractor PI firm on developing responses.

4.4.3 Project Identification Boards and Signage

Public information and warning signage will be maintained throughout the duration of the Project. All signage will be coordinated and comply with the Maintenance of Traffic (if Design-Build) requirements.

4.4.4 Website Information Dissemination

The Contractor shall follow CDOT's Information Systems guidelines to develop internet web page content specifically for the Project and provide consistent updates with the latest Project information (web page development experience is not necessary as the Contractor will simply supply information for the CDOT web page template). This web page will be located on CDOT's main web site, as per CDOT Information Systems procedures, and updates will be sent to CDOT's web administrator for uploading. It shall contain all appropriate links to/from other sites if applicable, e.g., local city, county, bus service, etc. PIM will ensure the web site is kept up to date with pertinent schedule information, new photos, contact information, etc.

4.4.5 Public Information Meetings

The Contractor shall host at least one public meeting (or teleconference town hall) prior to the commencement of construction and at designated milestones during the Project. The meetings will be held in a convenient location for community and business groups. Depending upon the Contractor's proposed MHT, and areas impacted within each phase, subsequent meetings may be required. The following outlines the general approach to the public meetings:

- For each of these meetings, the Contractor shall work with CDOT to make all necessary arrangements including logistics (schedule, location and facilities), public notice, advertisement, invitation, announcement, record of attendance and minutes. Announcement may include Project newsletters. The Contractor and CDOT will jointly develop the format, style, and layout of these meetings. Information to be discussed at the meeting includes:
    - Scope of Project
    - Construction schedules
    - Construction impacts and Methods of Handling Traffic
    - Other coping information
- The Contractor shall provide scripts, rehearsals, coaching, and evaluation in preparation for meetings as necessary. The Contractor shall design and produce appropriate presentation and collateral materials in consultation with CDOT. Minutes will be distributed within five working days following each meeting. The Contractor shall work closely with CDOT to craft accurate responses to questions and comments received at these meetings if necessary. The Contractor shall document how responses are sent back to the public. Any action items or issues reported at the Public Information Meetings will be entered into the Project database.

12
REVISION OF SECTION 626
PUBLIC INFORMATION MANAGEMENT
(TIER I)

- The Contractor may be required to translate meeting notices and other materials and provide language interpretation services at meetings.

4.4.6 Other Public Meetings

The Contractor shall also organize informal smaller meetings with the Project Manager, one-on-one stakeholder outreach, town hall teleconferences with key stakeholders prior to major construction phases or as necessary.

4.4.7 Personal Contacts

A member of the Contractor public information team will manage and implement email and phone contacts through the duration of the Project. More focused, individual contacts will be necessary to keep the public aware of all issues pertaining to the Project, such as all road and driveway closures and utility disruptions that impact a specific stakeholder or group of stakeholders. Contact will occur according to Response Protocol and will consist of providing information on the planned work, impacts, expected duration of the work, contact information, and any other Project-related items.

4.4.8 Other Stakeholder Meetings

Building on the work of earlier efforts, the Contractor shall participate with CDOT on any meetings throughout the duration of the Project as requested. The Contractor shall provide appropriate technical staff as required.

4.4.8 Project Tours and Special Events

The PIM shall provide CODT with the opportunity to give all media, businesses and government officials tours of the construction areas and to support coordination of special events (groundbreaking or grand opening). The PIMT will provide representatives of the Contractor to participate in tours and event, as well as assist in the coordination of the events.

4.5 Public Information Collateral

The Contractor shall develop a variety of outreach collateral to share coping information to the public including:

- Website Updates/Newsletter – Write, design, print and disseminate via email one newsletter monthly to key stakeholders.
- Social media/advertising – Develop and disseminate as necessary (typically around major impact work)

4.5.1 Weekly Emails to Stakeholder

CDOT will create a corridor-wide map that team members can access to import and update traffic impact information for specific sections of the corridor. This tool will be used as the weekly email. Information for this email will be due to CDOT by noon on Thursday. CDOT will wait for any changes on Friday before sending out the email by 2 p.m.

- Links to this map will be shared through weekly emails, allowing the public to access the traffic impact and detour information they need

5.0 Issues Management

More often than not, an issue facing a project can have a significant communications component that should be addressed in a strategic, coordinated manner. CDOT will take the lead in all issues management as it relates to broad Project vision. The Contractor shall also provide strategic communications and public affairs assistance to issues as they arise. The Contractor shall address issues management as it relates to coping/construction. Specifically, the Contractor shall use the following steps to assist CDOT in issues management as requested.

6.0 Crisis Communications Plan

In an event of a crisis, CDOT will be the lead agency to handle communication with the media, public, CDOT staff, etc. The Contractor shall be available to help coordinate with CDOT and provide information necessary to respond to the crisis.

The PIP shall include a crisis communications plan for the Contractor's response to emergencies and incidents during the Project. The Contractor shall coordinate this approach with the Contractor's overall Incident Management Plan.

The Contractor's crisis communication approach for its public information staff shall include:

1. Designated staff to respond to the emergency
2. Types of potential emergencies
3. Approaches to addressing potential emergencies
4. Boilerplate messaging that includes:
    - A. Cause of specific disruptions (whether construction related or not)
    - B. Actions being taken to alleviate the problem
    - C. Impact to the public and notification procedures
    - D. Anticipated duration of the disruption

The Contractor shall provide specific details on internal coordination and communication that will occur with other Contractor groups, CDOT, and other Stakeholders.

14
REVISION OF SECTION 626
PUBLIC INFORMATION MANAGEMENT
(TIER I)

6.1 Emergency Information Dissemination –Communications Tree

The Contractor shall establish and manage an emergency response telephone and/or email tree. All appropriate personnel shall be included on this communications tree for immediate response in the event of an emergency. The telephone/email tree shall be divided into areas of expertise so the proper people are called and/or emailed for specific emergency situations. CDOT, CDOT Communications staff, and the Contractor's Engineer shall be included on the communications tree for notification of any emergency that may arise. The Contractor shall develop and maintain a contact list of emergency service providers as part of its crisis communications approach. The Contractor shall provide information to emergency service providers. The Contractor shall submit the emergency response communications tree to CDOT for Acceptance at NTP.

The Contractor shall be responsible for collecting, processing, and providing to CDOT several types of coping information for the Project. Outlined below are some, but not all, of the types of information necessary to inform the public regarding the Project. The Contractor shall include the following types of information and minimum performance expectations when developing the various components of the PIP:

7.0 Environmental Mitigation

In addition to the requirements of Section 5, Environmental Requirements, the Contractor shall coordinate any mitigation requirements, as they pertain to the public, with CDOT to ensure the public is aware of and participates in those areas where their input is required.

7.1 Noise

The Contractor shall communicate the scheduling of noise wall construction with individual property owners and impacted communities. The Contractor shall work with all impacted municipalities and individuals to comply with mitigation requirements.

METHOD OF MEASUREMENT AND BASIS OF PAYMENT

Public Information Management will be measured as the number of work days elapsed from the project Notice to Proceed date to the date of Final Acceptance.

Failure to provide acceptable Public Information Management will result in withholding of payment for the work days affected.

15
REVISION OF SECTION 626
PUBLIC INFORMATION MANAGEMENT
(TIER I)

Payment will be made under:

Pay Item	**Pay Unit**
Public Information Management (Tier 1)	Day

Payment for Public Information Management will be full compensation for public information office, meetings, telephone lines, and all other labor and materials required to complete the item, except signs. Signs will be measured and paid for in accordance with Section 630.

If the Contractor fails to complete construction within the approved contract time, payment will not be made for Public Information Management for the period of time after expiration of the approved contract time. These items shall be provided at the Contractor's expense.

1
REVISION SECTION 715
LIGHTING AND ELECTRICAL MATERIALS

Section 715 of the Standard Specifications is hereby revised for this project as follows:

Subsection 715.04 shall include the following:

Type A luminaire - Grade Mounted Wallwasher to be nominal 4.3" diameter faceplate and cast aluminum housing, medium beam distribution with wallwash distribution, tempered glass lens, bronze finish, visor, integral electronic 0-10v dimming driver, suitable for wet location, IP 66, 3000K LED light source, nominal 1282 lumens, 15 watt, 120/277 volt. Manufactured by We-ef,, model number FLC121 LED with 145-0031 fixture, 665-9301 short mounting post, 145-9192 visor, 145-0145 wallwash lens, or approved equal by LumenPulse or Ligman lighting.

Type B luminaire - Grade Mounted Adjustable Spotlight to be nominal 4.3" diameter faceplate and cast aluminum housing, very narrow beam distribution, tempered glass lens, bronze finish, visor, integral electronic 0-10v dimming driver, suitable for wet location, IP 66, 3000K LED light source, nominal 1282 lumens, 15 watt, 120/277 volt. Manufactured by We-ef,, model number FLC121 LED with 145-0055 fixture, 665-9301 short mounting post, 145-9192 visor, or approved equal by LumenPulse or Ligman lighting.

Type C luminaire - Grade Mounted Adjustable Spotlight to be nominal 4.3" diameter faceplate and cast aluminum housing, very narrow beam distribution with linear spread lens, tempered glass lens, bronze finish, visor, integral electronic 0-10v dimming driver, suitable for wet location, IP 66, 3000K LED light source, nominal 1176 lumens, 15 watt, 120/277 volt. Manufactured by We-ef,, model number FLC121 LED with 145-0055 fixture, 665-9301 short mounting post, 145-0050 linear spread lens 145-9192 visor, or approved equal by LumenPulse or Ligman lighting .

Type F luminaire - Handrail Luminaire to be nominal 1" diameter downlight with asymmetric distribution, coordinate exact part number based on handrail shape and wall thickness, suitable for wet location. Manufactured by Klik model number LEDpod-40-30k-a-TBD-DIM-TP, or approved equal by Wila or Teslyte lighting.

Type FD Driver - 100 watt remote dimmable driver 0-10v Manufactured by Klik, model number LP100WPRITRNDIM, or approved equal by Wila or Teslyte lighting.

Subsection 715.06 shall include the following:

All in-grade Pull Boxes shall be polymer concrete, bottomless and tier 22 rated bolted covers. 13 inches by 24 inches and 12 inches deep manufactured by Quazite; Cat. # PG1324BA12, unless otherwise noted on the plans. Covers shall be Cat. # PG1324HH00 with stainless steel bolts and the word “ELECTRIC” molded into the top. Or approved equal.

Subsection 715.07 shall include the following:

All wiring shall be copper with 600-volt insulation, rated for outdoor use, THWN, THWN-2, XHHW, USE etc. All conduit sized on plans were sized using THWN copper sheathed wires, any other sheathing type may result in the contractor need to size up the conduit to accommodate the different wire type at no additional cost to the project. Wire sizes #14 AWG through #10 AWG shall be solid copper. Wire size

2
REVISION SECTION 715
LIGHTING AND ELECTRICAL MATERIALS

#8 AWG and larger shall be stranded copper with the exception of service ground conductors to ground rods shall be #6 soft drawn bare (solid) copper unless otherwise noted on plans. See plans and details for the wire sizes to different systems. All conductor sizes shall be (at the minimum) sized to the breaker amperage feeding the circuit, per the NEC table 310.16. Increased sizes on plans are shown for voltage drop purposes.

Each luminaire in the 240-volt system shall be fused with 10-amp fuses. Each luminaire shall include built in in-line fuses. The grounding wires shall not be fused.

Subsection 715.08 shall include the following:

Meter Power Pedestal to meet or exceed CDOT and Xcel Energy Standards.

Meter Power Pedestal 'MPCLTG14 & MPCLTG15 : Shall be a combination meter power pedestal all-in-one in a NEMA 3R Stainless Steel Enclosure as follows:

(1) 120/240V-1ph-3w, Metered, 100 Amps MCB
(2) Stainless steel NEMA 3R enclosure.
(3) 100A service rated T-handle pull out, fused disconnect for cold sequence metering in NEMA 3R enclosure.
(4) Meter Sockets (200 amp minimum) with lever bypass to Xcel Energy specifications
(5) Meter cover hold open lever.
(6) Meter tab lockable dead-front cover.
(7) Copper bus, service entrance rated, load center panel for always on loads, and switched load center for lighting loads (controlled by built-in photocell operated lighting contactor throught hand-off-auto selector switch) with main circuit breaker and all branch breakers as indicated on the panel schedule on the plans.
(8) NEMA 5-20R, GFCI maintenance receptacle flush mounted in dead front.
(9) 60A-250V-3P Lighting contactor built-in to control the bottom switched load center.
(10) NEMA 3R 120v photoelectric control with 3-prong twist-lock receptacle base wired through the hand-off-auto (HOA) switch (photocell control of the lower load center when switch is in the auto position). The photoelectric control shall be mounted on the north side on enclosure to minimize the sun's interference.
(11) Hand-off-auto (HOA) selector switch flush mounted in dead-front cover.
(12) 3/4" x 10'-0" copper clad driven ground rods, (2) required a minimum of 8'-0" apart.
(13) Provide all service lateral and secondary feeder connections as shown on the plans and details.
(14) Reinforced concrete foundation per structural engineer licensed in the state of Colorado.

(15) Provide white phenolic label with black letter stainless steel screw attached to enclosure. Label to include "panel designation, voltage, amperage, and fed from" information in a minimum of 1/8" high lettering.

"Arc-Flash Hazard Warning" labels shall be furnished and installed by the electrical contractor per the National Electric Code NEC 110.16 and the NFPA 70E, and all other labels required by NFPA 70 shall be installed on All new panels.

FORCE ACCOUNT ITEMS

DESCRIPTION

This special provision contains the Department's estimate for force account items included in the Contract. Force Account work shall be performed as directed by the Engineer.

BASIS OF PAYMENT

Payment will be made in accordance with subsection 109.04. Payment will constitute full compensation for all work necessary to complete the item.

Force account work valued at $5,000 or less, that must be performed by a licensed journeyman in order to comply with federal, state, or local codes, may be paid for after receipt of an itemized statement endorsed by the Contractor.

Force Account Item	Quantity	Estimated Amount
F/A Minor Contract Revisions	F.A.	$ 296,000
F/A Fuel Cost Adjustment	F.A.	$ 1
F/A On the Job Trainee	HOUR	$ 12,800
F/A Furnish and Install Electrical Service	F.A	$ 5,000
F/A CMGC Overrrun Pool	F.A.	$

TRAFFIC CONTROL PLAN - GENERAL

This work takes place during the Construction Package 2-3 work, and all traffic control requirements and anticipated impacts apply to Construction Package 5.

All traffic control payment items are included in Construction Package 2-3, and will not be paid for again for Construction Package 5 work.

Town of Johnstown

TOWN COUNCIL AGENDA COMMUNICATIONS

AGENDA DATE: March 07, 2022

SUBJECT: Ordinance 2022-227 Approving the P.U.D. Outline Development Plan for Thompson Ridge Estates

ACTION PROPOSED: Hold Public Hearing and Consider Ordinance 2022-227 Approving the P.U.D. Outline Development Plan for Thompson Ridge Estates, on First Reading

ATTACHMENTS:
1. Vicinity Map
2. Ordinance 2022-227
3. Thompson Ridge Estates ODP
4. PZC Staff Report (10/27/21)
5. Exhibit – Thompson River Ranch 2005 Preliminary Plat sheet
6. Public Comment Letters

PRESENTED BY: Justin Currie, Planner II

AGENDA ITEM DESCRIPTION:

The applicant, R&M Holdings LLC., is requesting approval of the Thompson Ridge Estates Outline Development Plan (ODP) for approximately 20 acres of land located south of the Thompson Crossing II residential subdivisoin and north of the Thompson River Ranch residential subdivision. The intent of this ODP amendment is to establish the zoning and design standards and guidelines for a proposed large acreage lot residential community.

The Planning & Zoning Commission held a public hearing on February 16, 2022. Public input was provided, with several comments centered around concern for loss of views and property values to surrounding homes along with concern for the potential of a new road/driveway through the existing wetland located on the property. Staff informed neighbors that additional design details will be forthcoming as full engineering drawings for those areas are discussed and developed and that review and approval of an ODP does not subdivide land or allow the applicant to develop as they have shown on their conceptual layout and design plan.

The Commission voted to recommend Approval with Conditions of the Thompson Ridge Estates P.U.D. Outline Development Plan to the Town Council, based upon the findings that are contained in the attached staff report (Attachment 4) and reiterated in substance in the proposed ordinance (Attachment 2).

LEGAL ADVICE:

The Town Attorney drafted the Ordinance.

FINANCIAL ADVICE:

NA

RECOMMENDED ACTION:

Approve Ordinance 2022-227 Approving the P.U.D. Outline Development Plan for Thompson Ridge Estates, on First Reading.

SUGGESTED MOTIONS:

For Approval: Based on findings and analysis presented at this hearing, I move to approve Ordinance 2022-227 Approving the P.U.D. Outline Development Plan for Thompson Ridge Estates, on first reading.

For Approval with Conditions: Based on findings and analysis presented at this hearing, I move to approve Ordinance 2022-227 Approving the P.U.D. Outline Development Plan for Thompson Ridge Estates, with the following conditions, to be revised and updated prior to the Second Reading of the Ordinance, to include:

a.

For Denial: Based on information presented in this hearing, I move to deny Ordinance 2022-227 as presented.

Reviewed and Approved for Presentation,

Town Manager

Vicinity Map

THOMPSON RIDGE ESTATES ODP NARRATIVE

NTS

TOWN OF JOHNSTOWN, COLORADO
ORDINANCE NO. 2022-227

APPROVING P.U.D. OUTLINE DEVELOPMENT PLAN FOR THOMPSON RIDGE ESTATES, LOCATED IN THE SOUTHEAST QUARTER OF SECTION 14 AND THE NORTHEAST QUARTER OF SECTION 23, TOWNSHIP 5 NORTH, RANGE 68 WEST OF THE 6TH PRINCIPAL MERIDIAN, TOWN OF JOHNSTOWN, COUNTY OF LARIMER, STATE OF COLORADO, CONSISTING OF APPROXIMATELY 20.01 ACRES

WHEREAS, the Town of Johnstown, Colorado ("Town") is a Colorado home rule municipality, duly organized and existing under the laws of the State of Colorado and the Town's Home Rule Charter; and

WHEREAS, the Town Council is vested with authority to administer the affairs of the Town; and

WHEREAS, R&M Holdings, LLC, a Colorado limited liability company, submitted an application to the Town for approval of the Planned Unit Development ("P.U.D.") Outline Development Plan for Thompson Ridge Estates, located in the Southeast Quarter of Section 14 and the Northeast Quarter of Section 23, Township 5 North, Range 68 West of the 6th Principal Meridian, Town of Johnstown, County of Larimer, State of Colorado, consisting of approximately 20.01 acres ("Property"); and

WHEREAS, on February 16, 2022, the Planning and Zoning Commission held a public hearing and recommended approval of the P.U.D. Outline Development Plan for Thompson Ridge Estates; and

WHEREAS, on March 7, 2022, the Town Council held a public hearing concerning approval of the P.U.D. Outline Development Plan for Thompson Ridge Estates; and

WHEREAS, after considering the Planning and Zoning Commission's recommendation for approval, reviewing the file and conducting such public hearing, Town Council finds that the P.U.D. Outline Development Plan for Thompson Ridge Estates is consistent with, and furthers the goals of, the *Johnstown Area Comprehensive Plan* goals and is compatible with all other applicable Town standards and regulation; and

WHEREAS, based on the foregoing, Town Council desires to approve the P.U.D. Outline Development Plan for Thompson Ridge Estates.

NOW, THEREFORE, BE IT ORDAINED BY THE TOWN COUNCIL OF THE TOWN OF JOHNSTOWN, COLORADO, THAT:

Section 1. P.U.D. Outline Development Plan Approval. The P.U.D. Outline Development Plan for Thompson Ridge Estates, located in the Southeast Quarter of Section 14 and the Northeast Quarter of Section 23, Township 5 North, Range 68 West of the 6th Principal

Meridian, Town of Johnstown, County of Larimer, State of Colorado, consisting of approximately 20.01 acres, attached hereto and incorporated herein by reference as Exhibit A, is hereby approved.

Section 2. Supersede and Replace. The P.U.D. Outline Development Plan for Thompson Ridge Estates adopted herein shall supersede and replace prior outline development plans, if any, for the Property.

Section 3. Effective Date. This Ordinance, after its passage on final reading, shall be numbered, recorded, published and posted as required by the Home Rule Charter of the Town of Johnstown, Colorado ("Charter") and the adoption, posting and publication shall be authenticated by the signature of the Mayor and the Town Clerk and by the Certificate of Publication. This Ordinance shall become effective upon final passage as provided by the Charter. Copies of the entire Ordinance are available at the office of the Town Clerk.

INTRODUCED AND APPROVED on first reading by the Town Council of the Town of Johnstown, Colorado, this _____ day of _____, 2022.

TOWN OF JOHNSTOWN, COLORADO

ATTEST:

By:_____ By:_____
Diana Seele, Town Clerk Gary Lebsack, Mayor

PASSED UPON FINAL APPROVAL AND ADOPTED on second reading by the Town Council of the Town of Johnstown, Colorado, this _____ day of _____, 2022.

TOWN OF JOHNSTOWN, COLORADO

ATTEST:

By:_____ By:_____
Diana Seele, Town Clerk Gary Lebsack, Mayor

THOMPSON RIDGE ESTATES OUTLINE DEVELOPMENT PLAN

Johnstown, Colorado

Owner/Applicant

R&M Holdings LLC
Contact: Mike Campana
3702 Manhattan Ave, Ste 201
Fort Collins, CO. 80526
970.229.5900

Planner

Russell + Mills Studios
Contact: Shelley LaMastra
506 S College Ave, Unit A
Fort Collins, CO 80524
970.484.8855

Civil Engineer

United Civil Design Group
Contact: Sam Eliason
19 Old Town Square
Suite 238
Fort Collins, CO 80524
970.530.4044

SHEET INDEX

ODP 1 - COVER SHEET
ODP 2 - OVERALL LAND USE & CIRCULATION PLAN
ODP 3 - LAND USE PLAN & DEVELOPMENT STANDARDS
ODP 4 - SINGLE-FAMILY LOT DIAGRAMS & FENCING
ODP 5 - ILLUSTRATIVE MASTER PLAN

LEGAL DESCRIPTION

Located in the southeast quarter of section 14 and the northeast quarter of section 23, township 5 north, range 68 west of the 6th principal meridian, Town of Johnstown, County of Larimer, state of Colorado.

PARCEL NUMBER

8514000005

PROJECT HISTORY/INTENT/SUMMARY

The proposed PUD will allow development within the framework of the Town of Johnstown PUD development standards. The plan will consist of single-family residential lots,that shall be a minimum of 1 acre. Total lot count shall not exceed 5 lots.

Open space shall be provided within of 100' river buffer and shall be available to all homeowners of the development for passive recreation.

An access road off of Watercress Drive shall provide access to a central turn around that will allow for individual lots to bring driveways off of.

Consistent fencing will be permitted around single-family homes, however will not be permitted between residential lots in order to maintain and open and natural feel for the development. Landscape within the open space areas will be native or adapted low-water species only.

RELATIONSHIP TO TOWN CODE & DEVELOPMENT STANDARDS

The provisions of this PUD shall prevail and govern development to the extent permitted by the Town of Johnstown municipal code. Where standards, details, and guidelines of the PUD - outline, preliminary, or final development plans - do not clearly address a specific subject or are silent, the Johnstown municipal code and other standards, regulations, and guidelines shall be used. All proposed development is subject to Town of Johnstown review procedures.

DEVELOPMENT PHASING

The entrance road/turnaround and utility improvements, including utility stubs to all lots will occur at the initial phase. Each lot will be developed as market conditions dictate and they are sold. This shall be done in coordination with the Town of Johnstown and Front Range Fire Rescue Authority.

LOCATION AND EXISTING CONDITIONS/RIGHT-OF-WAY DEDICATION

Thompson Ridge Estates is is bounded by the Thompson Crossing subdivisions to the north and west, Vacant land to the east, and the Thompson River to the south.

The property is presently undeveloped. There are existing sewer and utilities that run across the site as well as an existing wetland.

No Right-of-way dedication is required for the development. An existing access easement to the site is located off Watercress Drive.

SURROUNDING ZONING/ADJACENT USES

North of property:
Thompson Crossing II residential subdivision, zoned PUD-MU

East of property:
Vacant land, zoned PUD-MU

South of property:
Thompson River Ranch, zoned PUD-MU

West of property:
Thompson Crossing I residential subdivision, zoned PUD-MU

GENERAL NOTES

1. All drainage elements are conceptual in nature and final determinations of the drainage system, to include the placement of detention/retention ponds, channels, and storm sewer, will be made in accordance with the applicable final drainage reports and plans.
2. A HOA shall be established to provide for common area maintenance and financing of the shared amenities including access roads and landscaping.
3. All access drives and driveways shall be privately owned and maintained.
4. A wetland survey will be conducted if disturbance of wetlands by construction activities are anticipated.

DEVELOPMENT OBJECTIVES

The development supports a number of priorities and objectives, including:

- Larger lot sizes that will allow for reduced density and the ability to maximize the high quality open space within the development.
- Passive recreation opportunities along the HOA open space bordering the Thompson River.

UTILITIES/PUBLIC FACILITIES

- Water: Town of Johnstown
- Sewer: Town of Johnstown
- Refuse Collection: Town of Johnstown
- Electric: Xcel Energy
- Natural gas: Xcel Energy
- Schools: Weld County School District re 5-J, Aims Junior College District
- Police: Town of Johnstown Police Department
- Fire Protection: Front Range Fire Rescue
- Library: High Plains Library District
- Storm Drainage: Metro District
- Floodplain: Town of Johnstown
- Streets/Pedestrian System: Town of Johnstown

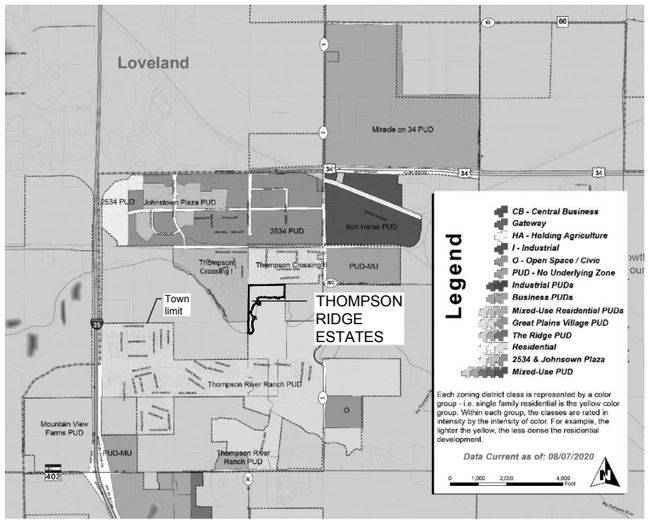

Zoning Map

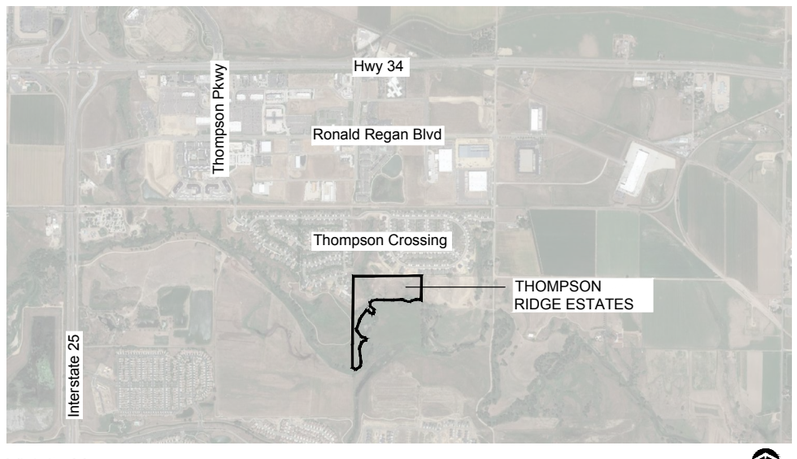

Vicinity Map

NORTH

APPROVALS
TOWN COUNCIL
THIS OUTLINE DEVELOPMENT PLAN, TO BE KNOWN AS THOMPSON RIDGE ESTATES ODP, IS APPROVED AND ACCEPTED BY THE TOWN OF JOHNSTOWN, BY ORDINANCE NUMBER _____ , PASSED AND ADOPTED ON FINAL READING AT A REGULAR MEETING OF THE TOWN COUNCIL OF THE TOWN OF JOHNSTOWN, COLORADO HELD ON THE _____ DAY OF _____, _____.

BY: _____
TOWN MAYOR

ATTEST: _____
TOWN CLERK

THOMPSON RIDGE ESTATES

REV.	COMMENT	DATE

SEAL:

ODP

Date: 02.21.2022
Drawn By: SL
Checked By: CR

Sheet Name
COVER SHEET

Sheet
ODP 1

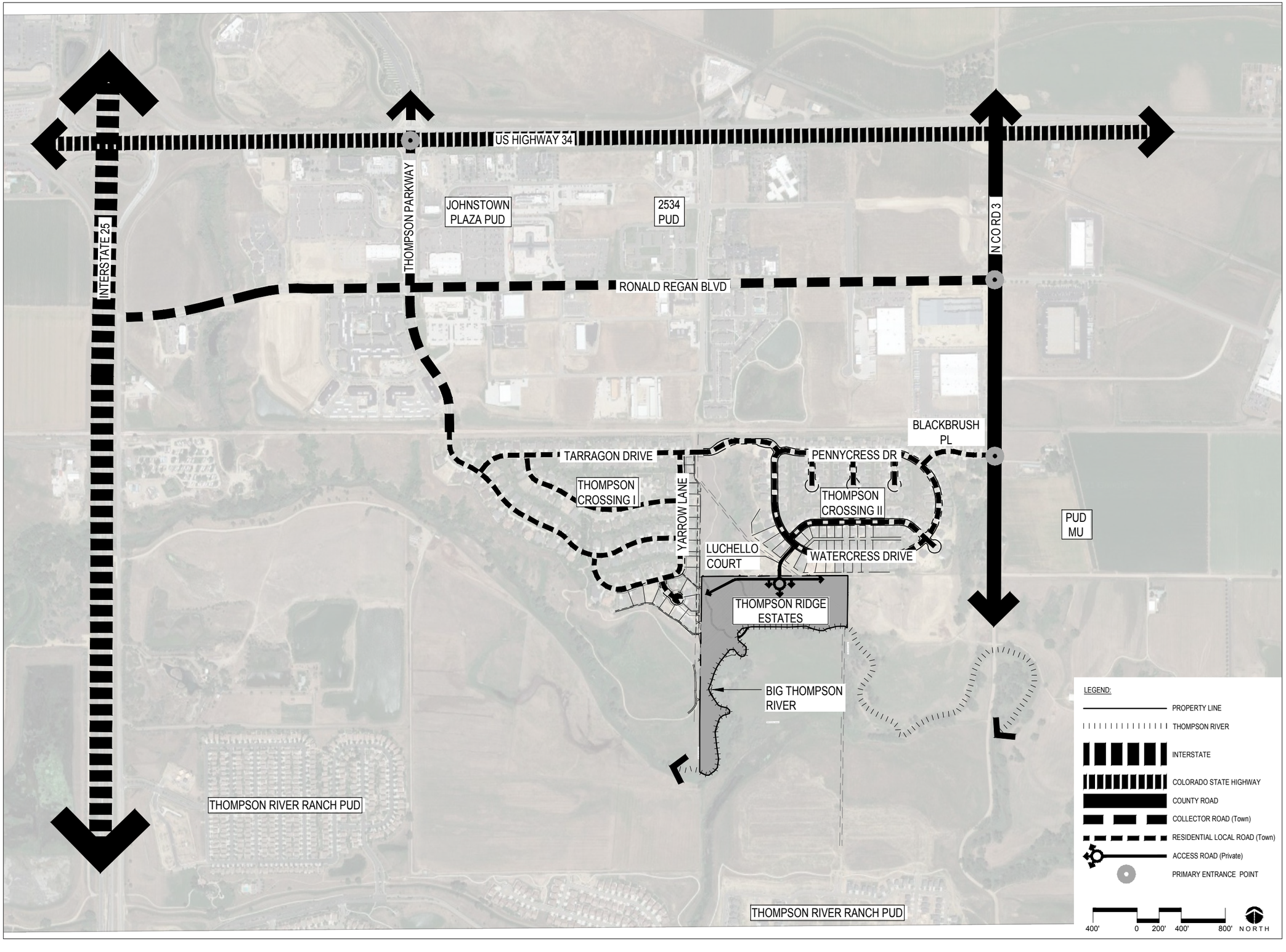

THOMPSON RIDGE ESTATES

russell+mills

REV.	COMMENT	DATE

SEAL:

ODP

Date: 02.21.2022

Drawn By: SL

Checked By: CR

Sheet Name

OVERALL LAND USE & CIRCULATION PLAN

Sheet

ODP 2

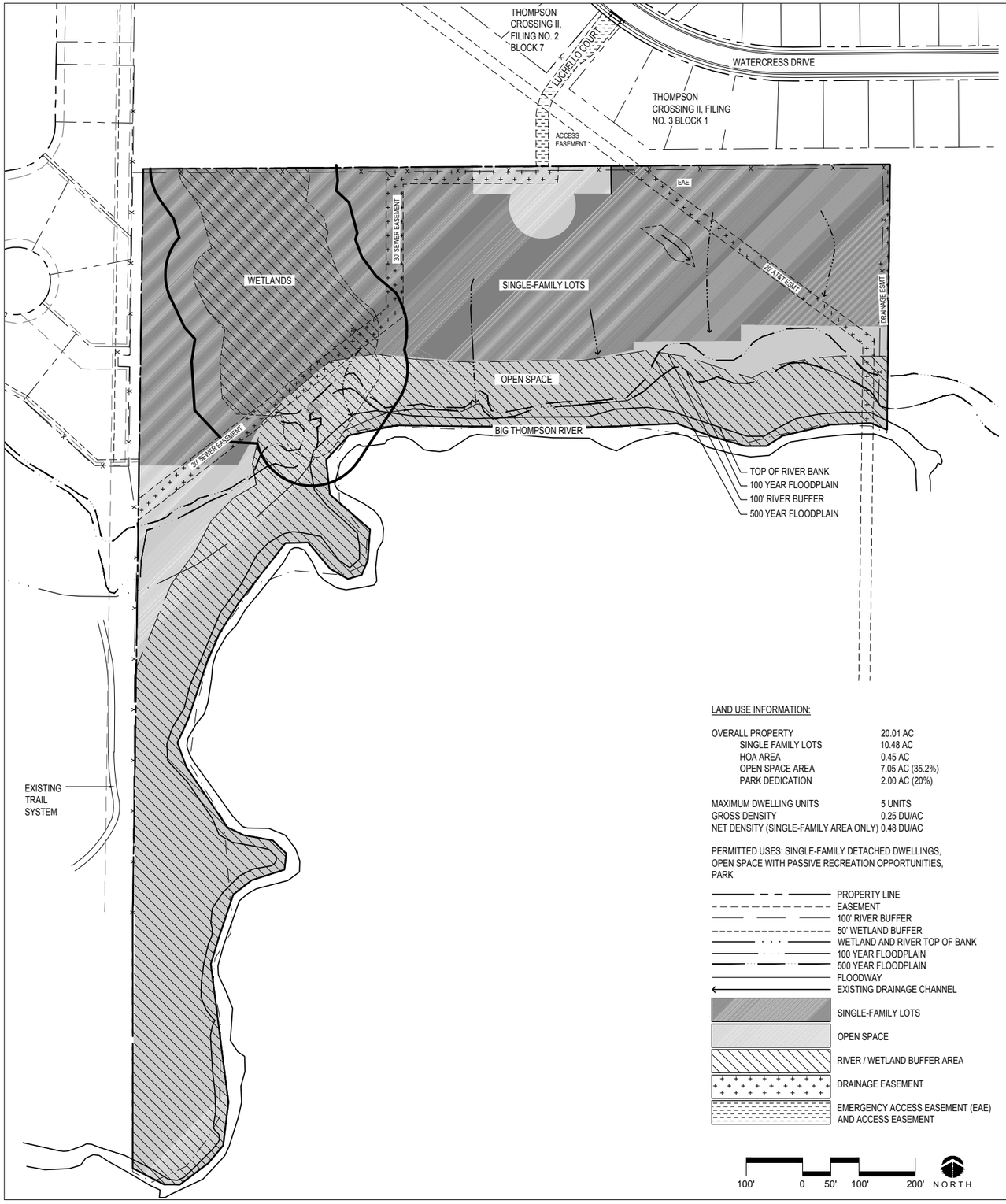

LAND USE INFORMATION:

OVERALL PROPERTY	20.01 AC
SINGLE FAMILY LOTS	10.48 AC
HOA AREA	0.45 AC
OPEN SPACE AREA	7.05 AC (35.2%)
PARK DEDICATION	2.00 AC (20%)
MAXIMUM DWELLING UNITS	5 UNITS
GROSS DENSITY	0.25 DU/AC
NET DENSITY (SINGLE-FAMILY AREA ONLY)	0.48 DU/AC

PERMITTED USES: SINGLE-FAMILY DETACHED DWELLINGS, OPEN SPACE WITH PASSIVE RECREATION OPPORTUNITIES, PARK

- PROPERTY LINE
- EASEMENT
- 100' RIVER BUFFER
- 50' WETLAND BUFFER
- WETLAND AND RIVER TOP OF BANK
- 100 YEAR FLOODPLAIN
- 500 YEAR FLOODPLAIN
- FLOODWAY
- EXISTING DRAINAGE CHANNEL
- SINGLE-FAMILY LOTS
- OPEN SPACE
- RIVER / WETLAND BUFFER AREA
- DRAINAGE EASEMENT
- EMERGENCY ACCESS EASEMENT (EAE) AND ACCESS EASEMENT

100' 0 50' 100' 200' NORTH

DETACHED SINGLE-FAMILY HOME BUILDING DESIGN STANDARDS AND GUIDELINES

GENERAL
Site Planning Guidelines for Thompson Ridge Estates are designed to promote and preserve the unique character of this community through the sensitive siting and location of homes. Maximizing view opportunities to the Big Thompson River, mountains, and open spaces is encouraged and expected. Homeowners and builders shall design and arrange their sites to protect natural features on the site and within the vicinity of the site. No lot within the Thompson Ridge Estates shall be less than 1.0 acres in size. A maximum of 5 lots shall be permitted.

All development shall conform to restrictions as indicated in current Town of Johnstown Municipal Code.

SITE DESIGN STANDARDS
Dwellings shall be custom and have a variety of front elevations. To maintain the vision of a unique neighborhood, the same house shall not be duplicated within Thompson Ridge Estates. Each house shall have at least 5 characteristics which clearly and obviously distinguish it from the other houses, including: different floor plans, exterior materials, roof lines, garage placement, and placement of the footprint on the lot and/or building face.

BUILDING FORM AND ARTICULATION
Additional design standards and requirements regarding the following: Scale, Massing, Exterior material and finishes, prohibited materials, color palette, roofs, windows, columns, and porches that will be specified in Design Guidelines.

DETACHED SINGLE-FAMILY HOME
All homes shall be limited to 2-stories. Walk out basements shall be permitted to accommodate grade changes on lots.
Ranch minimum main floor: 2200 square feet (excluding garage).

Two-story above grade minimum: 2800 square feet (excluding garage).

Maximum building height: The maximum building height is 30 feet.
All residential development shall conform to height restrictions as indicated in current Town of Johnstown Municipal Code.

ATTACHED GARAGES
Attached garage to match the architecture of home.

DETACHED ACCESSORY GARAGE
Detached accessory garage max: 3750 square feet, 16 foot walls and 30 feet to roof peak or ridge.

SETBACKS
Front Yard: Varies, 30' minimum
Side Yard: Varies, 20'-25'
Rear Yard: Varies, 20' minimum

OPEN SPACE
A large portion (minimum 30% or 6.0 AC) of the PUD will be open space with a natural character for more passive recreation. These areas also will provide a natural/native plant palette that will enhance views and areas of use. A minimum of 10% of the PUD will be dedicated to the Town of Johnson for park area.

LANDSCAPE STANDARDS
The design intent for the PUD is to create a community that celebrates the surrounding ecosystem. Water conservation through appropriate landscaping techniques and plant species selection will be emphasized for the project as well as enhanced natural areas and protected ecosystems. Landscape shall adhere to Town of Johnstown Landscape Standards.

ENTRY POINT TREATMENT
Entry points into the PUD will be from Watercress Drive in the Thompson Crossing II subdivision. The 20' access drive with terminate a turn around cul de sac with a large central landscaped island.

OPEN SPACE / BUFFER YARD TREATMENT
Landscape palettes will contain a native seed mix with forbes and native perennials. Clusters of drought resistant shrubs (i.e. rabbitbrush, sages, mormon tea, etc) will create a diverse understory with deciduous and evergreen trees (i.e. hackberry, sand cherry, oaks alders, spruce, pine, etc) creating visual interest that is rooted in the context of the upland ecosystem. Areas along the Thompson River will be maintained in there natural state.

SINGLE-FAMILY RESIDENTIAL LOT TREATMENT
1. Individual lot landscaping will be provided by each homeowner.
2. Design shall be in accordance with the covenants of the community. A maximum of 4,000 SF of high water use irrigated area and 5,700 SF of low water use irrigated area is permitted on each single-family lot. Refer to ODP 4 for Typical Lot Irrigated Landscape Area Diagram.
3. Must be completed within 12 months of certificate of occupancy.

IRRIGATION
Landscaping in the HOA turnaround island will be provided with drip irrigation. Single-family lots will provide permanent irrigation for areas that are landscaped directly adjacent to the homes. The greater portion of the Thompson Ridge Estates will maintain the existing natural state and shall not be irrigated.

SIGNAGE
A monument sign identifying the final development name shall be located at the turn around island entrance. Materials and character of signage shall reflect the overall theme and character of the development. All lighting shall meet Town of Johnstown standards.

STORAGE
Boats, campers, and trailer vehicles shall only be permitted to be stored within completely closed structures.

LIGHTING
All lighting shall be full cut-off with a kelvin temperature of 3,000 kelvin maximum. No light spillage shall be permitted outside of the specified lot.

THOMPSON RIDGE ESTATES

russell+mills

REV.	COMMENT	DATE

SEAL:

ODP

Date: 02.21.2022
Drawn By: SL
Checked By: CR

Sheet Name
LAND USE PLAN & DEVELOPMENT STANDARDS

Sheet
ODP 3

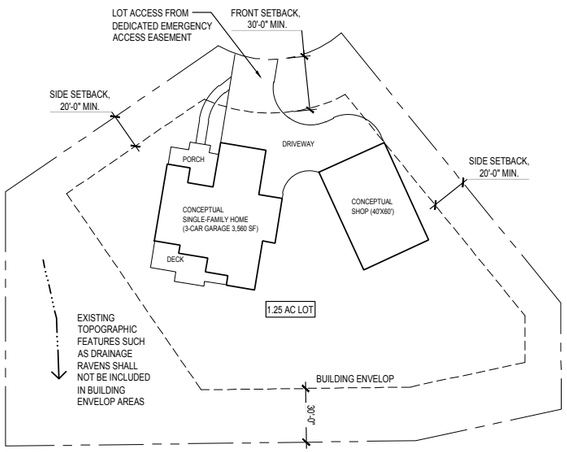

TYPICAL SINGLE-FAMILY DETACHED LOT SETBACKS DIAGRAM

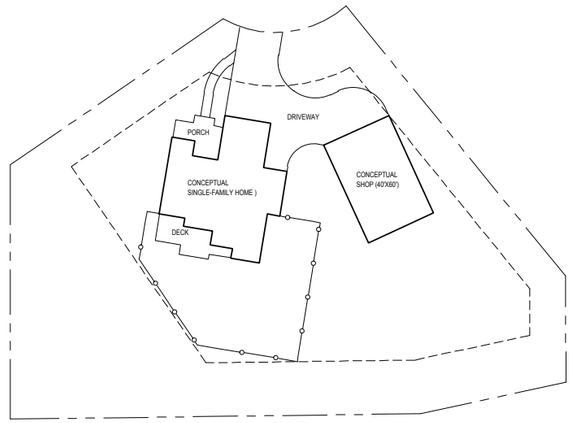

FENCE LOCATION DIAGRAM

3-RAIL FENCE

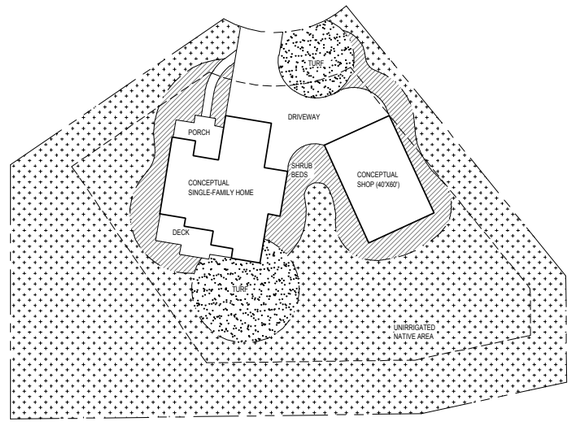

TYPICAL LOT IRRIGATED LANDSCAPE AREA DIAGRAM

LEGEND:

- IRRIGATED LANDSCAPE - HIGH WATER USE - MAXIMUM AREA ALLOWED = 4,000 SF
- IRRIGATED LANDSCAPE - LOW WATER USE - MAXIMUM AREA ALLOWED = 5,700 SF
- NON-IRRIGATED NATIVE AREA

40' 0 20' 40' 80'

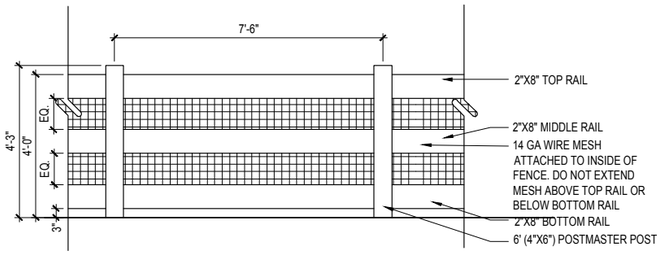

OUTSIDE ELEVATION (VIEW FROM OPEN SPACE)

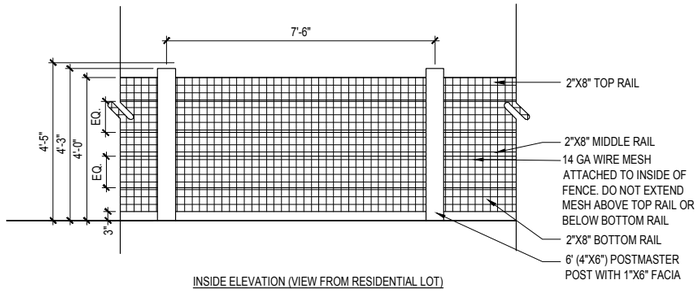

INSIDE ELEVATION (VIEW FROM RESIDENTIAL LOT)

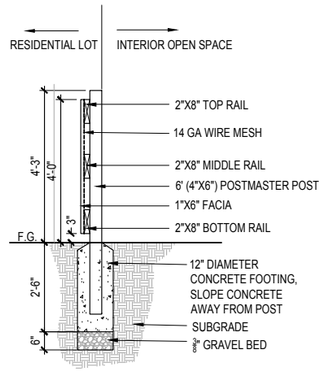

FENCE SECTION

NOTES:

1. ALL FENCING MATERIALS SHALL BE CEDAR OR DOUGLAS FIR.

3 RAIL FENCE

SCALE: 1/2"=1'-0"

DT-FENC-RAIL

THOMPSON RIDGE ESTATES

russell+mills

REV.	COMMENT	DATE

SEAL:

ODP

Date: 02.21.2022

Drawn By: SL

Checked By: CR

Sheet Name

SINGLE-FAMILY LOT DIAGRAMS & FENCING

Sheet

ODP 4

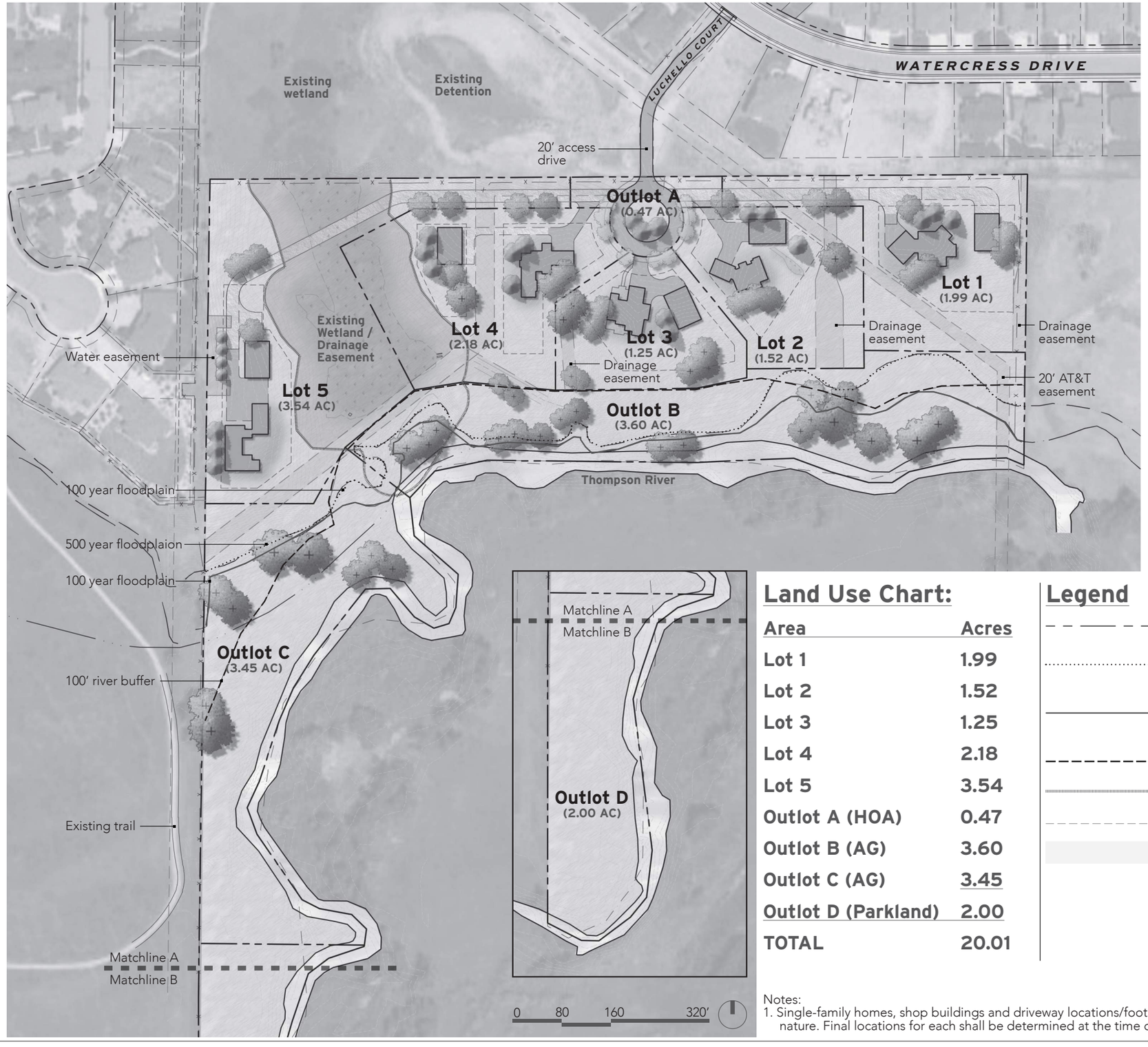

Land Use Chart:

Area	Acres
Lot 1	1.99
Lot 2	1.52
Lot 3	1.25
Lot 4	2.18
Lot 5	3.54
Outlot A (HOA)	0.47
Outlot B (AG)	3.60
Outlot C (AG)	3.45
Outlot D (Parkland)	2.00
TOTAL	20.01

Legend

- Property line
- 500 year floodplain
- 100 year floodplain
- 100' river buffer
- 50' wetland buffer
- Building envelop
- Easement

Notes:
1. Single-family homes, shop buildings and driveway locations/footprint on lots are conceptual in nature. Final locations for each shall be determined at the time of building permitting.

THOMPSON RIDGE ESTATES

russell+mills

REV.	COMMENT	DATE

SEAL:

ODP

Date: 02.21.2022
Drawn By: SL
Checked By: CR

Sheet Name

ILLUSTRATIVE MASTER PLAN

Sheet

ODP 5

Town of Johnstown

PLANNING & ZONING COMMISSION
STAFF ANALYSIS REPORT

ITEM:	**Public Hearing and Consideration for the Thompson Ridge Estates Outline Development Plan (ODP)**
DESCRIPTION:	Proposed ODP for a large lot Subdivision on approximately 20 acres.
LOCATION:	South of the Thompson Crossing II subdivision, west of County Rd. 3/High Plains Blvd.
APPLICANT:	Mike Campana, R&M Holdings LLC
STAFF:	Justin Currie, Planner II
HEARING DATE:	February 16, 2022

EXECUTIVE SUMMARY

The Applicant is requesting consideration of an Outline Development Plan encompassing 20.01 acres to establish the zoning and design standards and guidelines for a proposed large acreage lot residential community.

ATTACHMENTS

1. Vicinity Map
2. Outline Development Plan
3. Neighborhood Meeting Summary – Oct 2021
4. Exhibit - Thompson River Ranch 2005 Preliminary Plat sheet
5. Public Comment

PROCESS NOTES

An ODP is a high-level "master planning" document that provides guidance on land uses, some development standards if they deviate from typical town codes or regulations, and ensure overall feasibility of the proposed intensity and density of a development with a review of an initial traffic report, a master drainage plan, overall circulation plans, understanding of property encumbrances - all of which require further detail be forthcoming as future development plans are known and reviewed/approved by the Town.

This project will need additional review and hearings to review proposed subdivisions, roadway and utility designs, drainage and stormwater design, architecture and landscape design, and other development details.

PROJECT SUMMARY

The project proposes a maximum of five (5) single family lots with a minimum lot size of 1 acre and each dwelling shall be custom and have a variety of front elevations. To maintain the vision of a unique neighborhood, the same house shall not be duplicated within Thompson Ridge Estates. Each house shall have at least 5 characteristics which clearly and obviously distinguish it from the other houses, including: different floor plans, exterior materials, roof lines, garage placement, and placement of the footprint on the lot and/or building face. All homes will be limited to 2-stories with a maximum building height of 30 feet along with a minimum front building setback of 30 feet, a 25 foot side setback, and a 20 foot rear setback. Lots are also limited to a maximum of 4000 SF each for high water usage turf-type irrigated areas, with low water use on the remainder of the landscaped areas (i.e., mulched beds, xeric, drip irrigated). Fence would be limited to 4-foot tall, 3-wood-rail open fencing.

Due to the existing wetland on site and its proximity to the Big Thompson River to the south an Ecological Characterization Report was submitted and recommended that there be a 50 foot buffer from the existing wetland and a 100 foot buffer from the Big Thompson River which the applicant has included with the ODP.

A minimum of 30% of the gross project site (6 acres) is required to be open space and the proposed ODP is providing 7.05 acres (35.2%) along with a 2 acre (10%) park to be dedicated to the Town with the location being determined during the subdivision platting review process.

The proposed main access into the development will come from an existing platted access easement from Watercress Dr., through the existing Thompson Crossing II residential subdivision located north of the project. Sewer and water mains were originally extended with the development of the adjoining neighborhoods.

An “Illustrative Master Plan” is included on Sheet 5 of the ODP to provide an idea of how development on this site could occur. This ODP does not subdivide this property, or require development to look exactly like this. Final development details and configuration is proposed with future subdivision and development plans, and permit applications, to be reviewed by the Town at a future date. The subdivision will be subject to public hearings and review by the Planning & Zoning Commission and Town Council.

Zoning: PUD-MU (Mixed Use).

ADJACENT ZONING & LAND USE

North	PUD-R –Thompson Crossing II Single Family neighborhood
East	RR2 – Larimer County Rural Residential, Vacant land
South	PUD-MU– Big Thompson River and Thompson River Ranch Residential Single Family neighborhood
West	PUD-MU–Thompson Crossing Single Family neighborhood

PROPERTY LAND USE HISTORY

This property has historically been open space/undeveloped land, in Larimer County.

The property was annexed as the WRFG Annexation, Ordinance 2000-639, and initial zoning, PUD-MU, under Ordinance 2000-646. While the subject property was included in the original early-2000s PUD plans for the Thompson River Ranch development area, this land was held by the original owners and never transferred/sold to Oakwood or the Thompson River Ranch Metro District, so it has remained privately owned. It was recently sold to the Applicant. Based on approved PUD plans that, at one time, erroneously showed this parcel within its bounds, a large portion of the property was intended as open space due to its proximity to the Big Thompson River, and the northern portion established a future developable area of approximately 4.5 acres. This is based on a 2005 preliminary plat that was approved by the Town, and still considered valid today, based upon the continued development of the Thompson River Ranch neighborhood. See Attachment 4.

PUBLIC NOTICE & COMMENT

A neighborhood meeting was held via Zoom (remote) on Thursday, October 14, 2021, and notifications were sent to property owners within 500 feet of the project. The meeting was attended by the applicant and their consultants, the prior planner assigned to the project, Kristin Cote, and adjacent residents. Neighborhood concerns have been expressed throughout this project, largely related to impact on existing wetland, impact on views due to proposed maximum building heights (30 feet), and access for construction from the existing Thompson Crossing subdivision through Watercress Dr. Staff has provided submittal documents to the neighborhood association and interested parties, upon request, with each submittal.

Notice for the Planning & Zoning Commission hearing was published in the Johnstown Breeze, on Thursday, January 27, 2022. This notice provided the date, time, and location of the Planning and Zoning Commission hearing, as well as a description of the project. Notices were mailed to all property owners within 500 feet of the property in question. This notice included a vicinity map and the proposed subdivision map. One public comment has been received by Staff as of the date of publication of this report and has been included with this staff report.

SUBMITTALS AND REFFERALS

Based upon the changes proposed, this ODP submittal included the proposed ODP plan set, as well as the updated design guidelines, and master engineering (i.e., grading, drainage, utility) and traffic studies that help the Town assess the feasibility of the intensity and density proposed within the project. These supplemental pieces are not “approved” with the ODP, but provide a baseline of information so the Town can better assess the impact on our services and systems. The project was referred to and reviewed by:

- Public Works Department
- Utilities Department
- FHU (Town Traffic Engineer)
- IMEG (Town Engineer)
- Loveland Fire and Rescue
- Larimer County
- Thompson R2-J School District
- LTWD
- Thompson Crossing Metro District

- Northern Colorado water Conservancy District

STAFF ANALYSIS

This ODP sets forth some basic development standards regarding setbacks, building heights, and lot sizes. More detailed design guidelines will be completed with the subdivision and development plan process.

The Comprehensive Plan Future Land Use Plan calls for a Medium Density/Intensity land use type in this area, north of the floodplain and river. The proposed ODP calls for a maximum density of 0.28 DU/Acre and Staff feels this is an appropriate intensity due to the sensitive nature of the project location with the Big Thompson River and floodplain to the south and an existing residential neighborhood to the north. The proposal of large lot, executive-style homes is complementary and compatible with the adjacent, existing Thompson Crossing neighborhoods and homes.

Staff estimates the current northern property line to be 55-60 feet from the nearest home to the north (per currently-available aerial maps). To the west, the closest existing home is approximately 45 to 48-feet from the property line. These distances in addition to the 20-30' minimum setbacks proposed would bring that distance to a 65 to 75-feet between existing homes and the proposed building envelope. For reference current SF-1 zoning requires only 20-foot setbacks from streets, and 5-foot setbacks from internal property lines.

There are existing water line connections north and west of the project site and the applicant proposes to connect to the existing water line to the north in the Thompson Crossing II subdivision. There is an existing sewer line that runs through the middle of the project from the southwest corner up to the project boundary to the north and into the Thompson Crossing II subdivision, the applicant proposes to connect to this existing sewer line. The access to the homes will be a privately-maintained access drive and has been approved, in concept, by Loveland Fire (LFRA) based on the limited number of homes.

Staff believes this subdivision will promote the Town's goals of efficient development patterns and adding to the variety of housing type and lot sizes.

RECOMMENDED PLANNING AND ZONING COMMISSION FINDINGS AND MOTIONS

Recommended Findings:

It is recommended that Planning and Zoning Commission send a recommendation for Approval with Conditions to Town Council that the requested Outline Development Plan of the Thompson Ridge Estates P.U.D. be approved based upon the following findings:

1. The proposed ODP amendment is in alignment with the current Johnstown Area Comprehensive Plan and its Future Land Use Plan.

2. The proposed ODP appears serviceable by Town systems, services, and utilities, with required improvements that will be reflected in future development and construction plans.

Recommended Motion to Approve:
Based on the application received, associated submittal materials, and the preceding analysis, the Planning & Zoning Commission finds that the request for the Outline Development Plan for the Thompson Ridge Estates P.U.D. furthers the *Johnstown Area Comprehensive Plan* goals, and is compatible with all other applicable Town standards and regulations, and therefore moves to recommend to the Town Council Approval based upon the findings as stated in this report.

Alternate Motion

- Motion to Deny: "I move that the Commission recommend to the Town Council Denial of the Thompson Ridge Estates ODP based upon the following findings…"

Planner:

Justin Currie, Planner II

NEIGHBORHOOD MEETING – THOMPSON RIDGE ESTATES ODP

Thursday, October 14, 2021 – 6:30 PM

Present: Shelley Lamastra – Russel Mills Studios
Colton Beck – United Civil Design Group
Mike Campana – Bellisimo Inc.
Valeria & Phil Schuman
Arlen & Yvonne Wittrock
Daniel Martin
LP (?)
Jeff (?)
Kristin Cote – Planner – Town of Johnstown

Meeting begins at 6:30 PM with a brief PowerPoint presentation by Kristin Cote.

Shelley Lamastra presents proposed plan for the site which addresses:

- The access easement from Watercress Drive;
- Preble Jumping mouse (closest habitat 15 miles from site);
- 50' wetlands buffer; and
- 100' riparian buffer.

Concerns stated by citizens:

- Access road through Watercress being utilized for both construction and access;
- Height of houses (proposed max 30');
- Timeframe for construction;
- Large wetland on proposed lot 5 and the steep grade of such;
- Potential for damages to the wetland; and
- Impact and destruction to the view.

Meeting concluded at 7:15 PM

(See attached comments received prior to the meeting via email)

Arlen & Yvonne Wittrock
4200 Angelica Place
Johnstown, CO 80534

October 8, 2021

Kristin Cote, Planner

Cc: Kim Meyer

City of Johnstown

450 S. Parish Ave.

Johnstown, CO 80534

RE: Thompson Ridge Estates Outline Development Plan

Dear Ms. Cote:

We are writing this letter to express our concerns, comments, and questions regarding the proposed Thompson Ridge Estates development as it has currently been presented. Our specific comments are:

1. We believe the project as it is currently being proposed will be detrimental to the environment and to the wildlife and aviary corridor along the adjacent Big Thompson River.

2. We object to the long circuitous driveway for proposed Lot 5 which goes through the wetland (which is a water inlet for the Big Thompson River). We find this to be environmentally unacceptable. Would the developer or the lot buyer be required to install a very expensive bridge over the top of this wetland / stream / water inlet? This does not sound reasonable or feasible and, again, would be detrimental to the environment.

3. We would also point out that the proposed driveway for Lot 5 would have an incredibly steep grade going down the hill into the wetland and then up again on the other side.

4. The project description as submitted states, quote:

"The site is bordered by undeveloped land to the east, **wetlands to the west**, The Big Thompson River to the south, and a residential development (Thompson Crossing II) to the north."

This statement is factually incorrect. To the west is the Thompson Crossing I development complete with many nice homes. Our home is one of them. Our home is not a wetland and it does not sit on a wetland.

5. As an alternative to the project as drafted, I suggest the developer consider developing smaller lots (0.5 to 1.0 acre in size versus the proposed 1.25-to-3.54-acre sizes) and develop those lots near the project access road entrance point. This would keep the homes and developed property further from the Big Thompson River and would preserve and protect the wetlands. In doing so, the developer could (potentially) develop more than the proposed five lots.

Thank you for your consideration of these points.

Sincerely,

Arlen & Yvonne Wittrock

4200 Angelica Place

From: AMBER M DELGROSSO <amberdelgrosso@comcast.net>
Sent: Thursday, October 7, 2021 9:26 PM
To: planning <planning@JohnstownCO.gov>
Subject: Thompson Ridge Estates

Concerns about the development plan for Thompson Ridge Estates

To Whom it may concern:

We built and live in the home at 4136 Watercress Drive. Based on the maps we have seen mailed to our house, it looks like the planned development will be built directly behind our house. If the houses are built on the north side of the river, they will be built directly behind us. It's tough to tell from the small, blurry maps we have received exactly what the plans are for where the homes are planned to be built at.

When we chose and purchased this lot to build on, we asked the question of our builder if there would be any other houses built behind us. They checked into it and were told, NO, the land behind our home was designated farmland/open space. We specifically chose this lot for the privacy it provides, and the beautiful unobstructed mountain views. We also paid a large premium for this lot due to these items.

We understand that now someone has purchased that property with intent to build homes. A person should be allowed to do what they want on their own property; but not when it destroys the property value of the homeowners around them. Not only will we lose all semblance of privacy behind our home- a road would have to be build behind our house to support the new homes, but putting houses behind ours would completely ruin the open views of the mountains, which will cost us at least $100,000-$200,000 in equity in our home. Is there a plan to reimburse us for the lost equity?

We love this community, and we love living here! But we are extremely angry and frustrated that the equity in our home is being destroyed, so that someone else can add equity to theirs.

Respectfully,

Amber & Brian DelGrosso

Amber DelGrosso-Owner
AnBranLey Pizza Inc.&
BAD Zs Pizza LLC
dba Domino's Pizza
970-290-4301

From: Josh Lyon <joshlyon1984@gmail.com>
Sent: Wednesday, October 6, 2021 4:58 PM
To: planning <planning@JohnstownCO.gov>
Subject: TRE

Good evening,

I just received a letter about the Thompson Ridge Estates.

So I just moved into my home in April and the only reason I bought it was due to the views and privacy.

Now the city of Johnstown will be putting homes directly behind us and completely blocking our views. SO we will no longer have privacy which will in turn have a sharp decrease in my home value and my family and I will move.

What Can I do to block this from happening?

Thanks

Item #9.

N 89°39'17" E

1326.13'

CENTER S 1/16 COR SEC 14
FOUND #6 REBAR W/
2" ALUMINUM CAP
L.S. 20676*

SE 1/16 COR
NOT FOUND OR SET
POINT FALLS IN OLD CAR
SET WITNESS CORNER SOUTH 14.00',
SET 36" LONG, #6 REBAR W/
3 1/4" ALUMINUM CAP
L.S. 16847*

77

LOT 1
201,381 SF
4.62 ACRES

TRACT P
6,243.74 SF
15.38 ACRES
OPEN SPACE
PERPETUAL DRAINAGE
EASEMENT

1318.83'

1319.57'

BIG THOMPSON RIVER

TRACT Q
1,843.44 SF
43.32 ACRES
OPEN SPACE
PERPETUAL DRAINAGE
AND TRAIL EASEMENT

N 00°48'15" E

S 00°41'58" W

MATCHLINE SEE SHEET 17 OF 30

NOLTE

0 30 60 120
1 inch = 60 ft.

LEGEND

FOUND MONUMENT

FOUND CORNER

CALCULATED POSITION
OF FOUND CORNER
NOT FOUND OR SET

SET #5 REBAR WITH RED
PLASTIC CAP L.S. 16847

FOUND #4 REBAR
AS NOTED, YELLOW PLASTIC CAP
L.S. 10444

FOUND #4 REBAR
AS NOTED, YELLOW PLASTIC CAP
L.S. 10774

FOUND #4 REBAR
L.S. 16847

FOUND #4 REBAR
AS NOTED, RED PLASTIC CAP
L.S. 10774

FOUND 2.5" IRON PIPE
L.S. 16847

FOUND #5 REBAR
WITH WHITE PLASTIC CAP
L.S. 19196 OR
STAMPED "HJ&O"

FOUND #4 REBAR
WITH RED PLASTIC CAP
L.S. 10432

FOUND #5 REBAR
AS NOTED, YELLOW PLASTIC CAP
L.S. 10444

(1) PER THE PLAT OF
WATERFORD SUBDIVISION.

(2) PER THE AMENDED
PLAT OF LOT 8
WATERFORD SUBDIVISION.

(3) PER THE PLAT
OF WATERMILL MLD

(4) PER THE PLAT
OF BIG FALLS

THOMPSON RIVER RANCH

PRELIMINARY PLAT
JOHNSTOWN, COLORADO

PREPARED FOR: WR DEVELOPMENT, LCC

DATE SUBMITTED: 08/03/04

NOLTE
BEYOND ENGINEERING
1901 SHARP POINT DRIVE, SUITE A, FORT COLLINS, CO. 80525
970.221.2400 TEL 970.221.2416 FAX WWW.NOLTE.COM

NO.	BY	DATE	REVISIONS

SHEET NUMBER
16
OF 30 SHEETS

SCALE
VERT.
HORZ.

FC002310T

DATE: 11/09/04 TIME: 3:57 p.m. DRAWING NAME: PPLAT-16.DWG
SERVER: FCSO_SERVICE PROJECT PLOTTING VIEW: PS
PATH: R:\FC0231\Cadd\Survey\PLATS\Sector LAL PROJ MODE: PS

XREFS: PP-PAXBN, PLAT-TXT, nmb, xr-KCTMAP-50, EXPN, EMA

Arlen & Yvonne Wittrock
4200 Angelica Place
Johnstown, CO 80534

February 7, 2022

Planning & Zoning Commission
Planning & Development Department
Justin Currie, Planner
City of Johnstown
450 S. Parish Ave.
Johnstown, CO 80534

RE: Thompson Ridge Estates Outline Development Plan

To: Planning & Zoning Commission and Planning & Development Department

We are writing this letter to express comments and concerns regarding the proposed Thompson Ridge Estates development as it has currently been outlined.

While we could raise questions regarding the general impact to the environment and to the wildlife and aviary corridor near and along the adjacent Big Thompson River, we will specifically focus on a significant aspect of the proposal that is in violation of U.S., state, and local environmental standards, rules, and regulations regarding wetlands that exist on the proposed development property.

The Federal government (U.S. Environmental Protection Agency), Colorado (Department of Public Health and Environment), and Larimer County (Department of Health and Environment) all have legally binding regulations affecting developments located near wetlands. The proposed Thompson Ridge Estates as described in the Outline Development Plan (ODP) is in violation of wetland regulations and requirements as legally defined and described by these various agencies.

We will reference one specific set of regulations -- those of Larimer County. Under the Larimer County Land Use Code Wetland Regulations:

"The following minimum buffer areas are required from the boundary of a wetland:

a. Wetlands of one acre or less: 50 feet.
b. Wetlands of more than one acre: 100 feet."

The wetland in question is partially on proposed Lot 5 and between proposed Lots 4 and 5. It begins at Tarragon Drive and extends to the Big Thompson River. Besides being a wetland, it also functions as a stream and inlet to the Big Thompson River.

During the neighborhood meeting held via Zoom on October 14, 2021 regarding the proposed Thompson Ridge Estates development, the representative for the development stated that the plan calls for a significant portion of the wetland to be filled in order to create an access road / driveway.

Filling in the wetland with dirt, rocks, or other aggregate is contrary to maintaining a legally binding 100-foot buffer area. Therefore, the proposed Lot 5, west of the wetland, cannot legally be developed since there would be no access to it. It should remain as agricultural land as do Outlot B and Outlot C on the development property.

We would note that there is an existing access road going through the wetland located near the Big Thompson River. This access road was built a number of decades ago when laws and regulations regarding wetlands were almost non-existent. It would not be allowed to be constructed under today's environmental laws.

Thank you for your service to our wonderful community and for your consideration of our comments.

Sincerely,

Arlen & Yvonne Wittrock

UPSTATECOLORADO
ECONOMIC DEVELOPMENT

822 Seventh Street, Suite 550
Greeley, CO 80631
www.upstatecolorado.org
P. 970.356.4565

February 8, 2022

Matt LeCerf
Town of Johnstown
PO Box 609
Johnstown, CO 80534

Dear Matt,

On behalf of the Upstate Colorado Economic Development professional team and Board of Directors, I want to thank you again for the Town of Johnstown's commitment and investment in building a stronger local economy. Community leaders like you provide critical support to our efforts to create high-wage, high-value jobs through diversification of the local industry base in Weld County and Northern Colorado.

In 2021, through our investors support, our great staff worked with our community partners to support three new/expanding companies that will ultimately create 48 new jobs and invest over $2 million in new facilities and equipment here in Weld County. In total, our team worked over 75 business leads, 24 of which became active. Many projects carry over into 2022 and we remain committed to sustaining our work with prospects helping to create and retain primary industry jobs.

For over 30 years, Upstate Colorado Economic Development has been dedicated to the development and maintenance of a healthy and sustainable economy through creating new job opportunities, stimulating income growth and expanding the local community tax base in Eaton. With the goal of creating wealth, preserving quality of life, and improving standard of living for Weld County residents, Upstate and our partners are off to a great start in 2022 and we want to make sure that we are assisting you in any way we can. We welcome a discussion to look at how we can further align your economic development goals with our activities. Please do not hesitate to contact me to set up a meeting at your convenience.

As always, I also welcome the opportunity to provide an update on Upstate's activities for your governing leadership and/or senior staff. Thank you again for being a part of our success. Please feel free to contact me with any questions, I look forward to speaking with you soon.

Sincerely,

Richard C. Werner
President & CEO
Upstate Colorado Economic Development

Town of Johnstown

Building Permit Statistics

January, 2022

Single Family Residential		**Commercial**	
Issued ytd	25	*New Building Issued ytd	2

Other Residential (basements/alterations/additions)		**Other Commercial * (tenant finish/alterations/additions)**	
Issued ytd	6	Issued ytd	1

Fees collected at permit issuance	**Residential YTD**	**Commercial YTD**
Construction Valuation	($7,976,709)	($1,151,252)
Building permit fees	$65,368	$4,933
F&F or F&F Credit	$0	$0
Paving	$0	$0
Water Upgrade	$0	$0
Water & Sewer Reimbursement	$0	$0
Raw Water Development Fee	$136,049	$0
Water Meter	$12,375	$0
Water Tap	$160,925	$0
Sewer Tap	$132,000	$0
Regional Sewer Development fees	$85,500	$0
Sewer Inspection Fee	$2,500	$0
Park	$12,500	$0
Use Tax	$139,032	$6,946
Larimer Use Tax	$20,105	$29
Open Space Impact Fee	$29,950	$0
Library Impact Fee	$28,700	$0
Public Facilities Impact Fee	$39,725	$0
Police Facilities Impact Fee	$18,325	$0
Transportation Facilities Impact Fee	$69,275	$0
Traffic Signal	$0	$0
School District Fee	($8,316)	N/A
TOTAL FEES (YTD)	**$952,329**	**$11,908**

Building permits issued for individual dwelling units - 1991 to (date)

Single family, duplex, 4-plex						
Year	**Issued**	**Month avg**		**Year**	**Issued**	**Month avg**
*1961 - 90	165	0.0		2016	132	11.00
1991	2	0.17		2017	140	11.67
1992	5	0.42		2018	126	10.50
1993	7	0.75		2019	87	7.25
1994	47	3.92		2020	108	9.75
1995	106	8.83		**2021**	184	15.33
1996	145	12.00		**2022**	25	25.00
1997	143	11.92				
1998	175	14..58				
1999	145	12.08		**TOTAL**	**5315**	
2000	134	11.92				
2001	152	12.67				
2002	262	21.92				
2003	284	24.17				
2004	331	27.67				
2005	375	31.33				
2006	180	15.75				
2007	160	133.42				
2008	97	8.00				
2009	89	7.42				
2010	124	10.33				
2011	184	15.34				
2012	310	25.84				
2013	378	31.50				
2014	272	22.67				
2015	162	13.50				